DURAMAX™ ALL PURPOSE VINYL STORAGE SHEDS A Product of USP US POLYMERS INC

Storage Shed

Patent #416.091

OWNER'S MANUAL / Instructions for Assembly

Size 10'x 8' with "Extension Kits"

Ver: 2.0

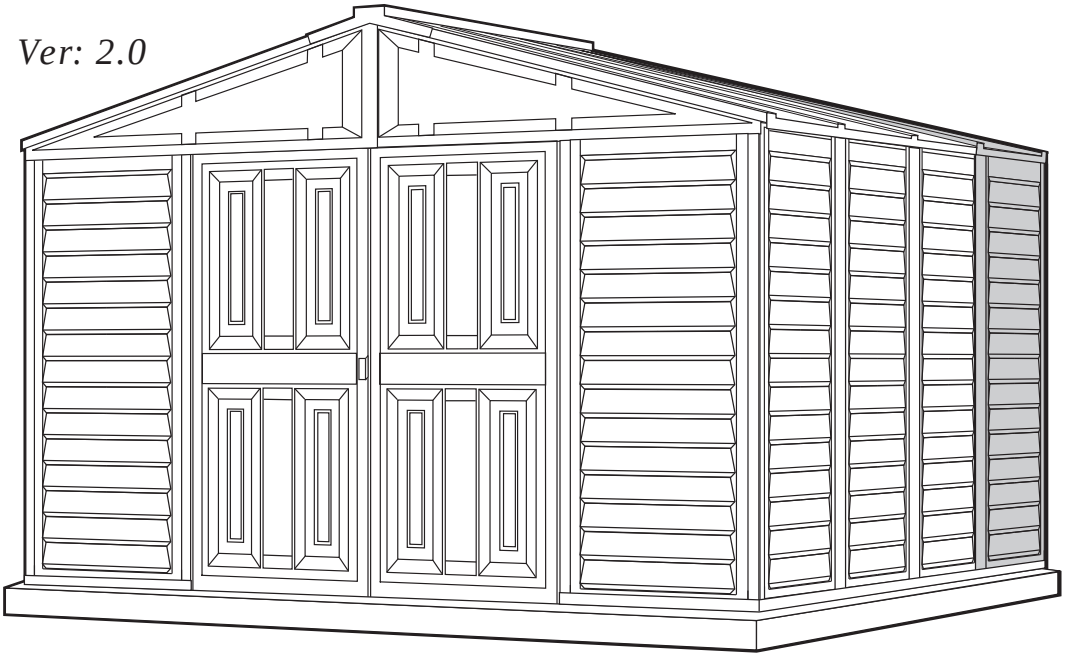

Customer Service Hotline
(800) 483-4674
www.uspolymersinc.com

Your Total Solution To maintenance Free Storage Sheds.

- All Weather Durable PVC
- Won't Dent, Rust, Rot or Mildew
- Tall Walk In Shed
- Never Needs Painting
- 61" Wide Double Doors
- Easy Assembly
- High Wind Tested
- Snow Load Tested 20lbs/sq.foot
- Pad Lock Ready (Lock not included)
- Wooden or Cement Foundation Needed

Available Kits

- Foundation Kit Available
- Modular 2.5' Extension Kits Available
- 10'x8' Window Kits Available

PART 1
ASSEMBLING SHED WITH EXTENSION KIT

PART 2
ADDING EXTENSION KIT TO EXISTING SHED

Note: For shed with extension use this manual only.

Requires two people and takes about 4-5 hours for Installation.

Call us for any missing or damaged parts.
Do not return to the store.

Duramax Storage Shed
Limited Fifteen Year Warranty

U.S. Polymer Inc. will send a replacement part free of charge, in the event of material defects and or workmanship for a period of fifteen years from the date of purchase.

This warranty is extended only to the original purchaser. A purchase receipt or other proof of date of original purchase will be required before warranty service is rendered. In no event shall we pay the cost of flooring, labor, installation or any other costs related thereto.

This warranty only covers failures due to defects in material or workmanship which occurs during normal use and does not extend to color change arising due to normal weathering or to damage resulting from misuse or neglect, commercial use, failure to follow assembly instructions and the owner's manual (including proper anchoring of the shed), painting, forces of nature and other causes which is beyond our control.

Claims under this warranty must be made within the warranty period by calling 1-800-483-4674 or mail in a dated sales slip and clear photograph of the part to:

U.S. Polymers, Inc.
6915 Slauson Avenue
Commerce, CA 90040

We reserve the right to discontinue or change components. If a component has been discontinued or is not available, U.S. Polymers, Inc. reserves the right to substitute a component of equal quality as may be compatible.

Limits and Exclusions

There are no express warranties except as listed above. The warrantor shall not be liable for incidental or consequential damages resulting from the use of this product, or arising out of any breach of this warranty. All express warranties are limited to the warranty period set forth above. Some states do not allow the exclusion or limitation on how long an implied warranty lasts, so the above limitations may not apply to you.

This warranty gives you specific legal rights and you may also have other rights which vary from state to state or country to country.

10’ x 8’ Parts List

Note: Check all parts prior to installation.

CODE	DESCRIPTION	QTY
B1LA	FRONT ‘U’ CHANNEL LEFT	1
B1RA	FRONT ‘U’ CHANNEL RIGHT	1
B21	SIDE ‘U’ CHANNEL	2
B22	SIDE ‘U’ CHANNEL	2
B3LA	BACK ‘U’ CHANNEL LEFT	1
B3RA	BACK ‘U’ CHANNEL RIGHT	1
CMA	MIDDLE COLUMN	7
CCA	CORNER COLUMN	4
CDLA	LEFT DOOR COLUMN	1
CDRA	RIGHT DOOR COLUMN	1
CB1A	FRONT CENTER BAND	2
CB2A	SIDE CENTER BAND SHORT	2
CB3XA	CENTER BAND	4
CB4A	FRONT CROSS CENTER BAND	2
RS1A	RS1 ROOF STRUCTURE	4
RS2A	RS2 ROOF STRUCTURE	4
RS3LA	RS3 ROOF STRUCTURE LONG	2
RS3XA	RS3 ROOF STRUCTURE SHORT	2
RS4XA	RS4 ROOF STRUCTURE	4
RS5A	RS5 ROOF SRTUCTURE	4
RS6XA	RS6 ROOF STRUCTURE	2
RS7XA	RS7 ROOF STRUCTURE	2
RS8A	RS8 ROOF STRUCTURE SUPP. LONG	4
RS9A	RS9 ROOF STRUCTURE SUPP. SHORT	4
MJ	MIDDLE JOINING SUPPORT	7
RS10A	RS10 ROOF STRUCTURE SUPPORT	2
RS11A	RS11 ROOF STRUCTURE SUPPORT SHORT	2
RS12A	RS12 ROOF STRUCTURE SUPPORT LONG	2
RS14A	SAGGING SUPPORT	12
DSH	DOOR STOPPER HORIZONTAL	1
SP↑	SIDE PANEL	12
FPL	FACIA PANEL LEFT	2
FPR	FACIA PANEL RIGHT	2
RP↑	ROOF PANEL	6
RRS	RIDGE COVER	3
DL	LEFT DOOR	1
DR	RIGHT DOOR	1

ACCESSORIES

CODE	DESCRIPTION	QTY
FDCL	DOOR COLUMN FITTING LEFT	1
FDCR	DOOR COLUMN FITTING RIGHT	1
FCC	CORNER COLUMN FITTING	4
FMC	MIDDLE COLUMN FITTING	7
FCB	CENTER BAND FITTING	4
RJ	90 DEGREE JOINT	4
PPG	ROOF PLUG W/WASHER	80
PIN	ROOF PIN	80
EPS	END PLUG SQUARE	4
CBC	CENTER BAND COVER	3
S1	DIA. 4.2 x 16mm. (5/32” x 5/8”)	
	SHEET METAL SCREW	253
S2	DIA. 4.2 x 32mm. (5/32” x 1 1/4”)	
	SHEET METAL SCREW	8
S7	DIA. 4.2 x 10mm. (5/32” x 3/8”)	
	SHEET METAL SCREW	16

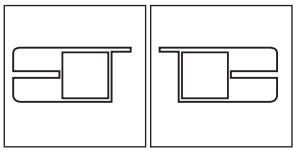
LEFT DOOR COLUMN (CDLA)
RIGHT DOOR COLUMN (CDRA)

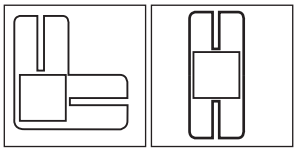
CORNER COLUMNS (CCA)
MIDDLE COLUMNS (CMA)

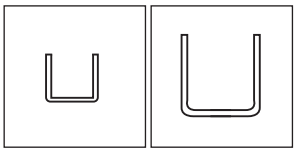
ROOF STRUCTURES (RS - 1A, 3XA, 3LA, 8A, 9A) (CB-1A, 2A, 3A, 4A) (MJ)
U-Channels (B1LA)(B1RA) (B21) (B22) (B3LA) (B3RA)

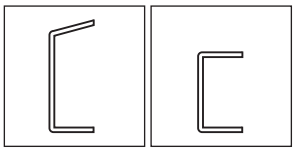
ROOF STRUCTURE (RS5A) (RS6XA) (RS7XA)
DOOR STOPPER (DSH)

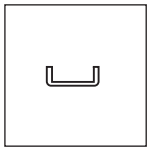
SAGGING SUPPORT (RS14A)

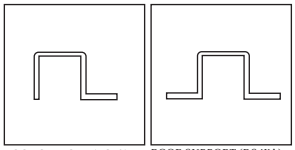
ROOF SUPPORT (RS2A) (RS10A)
ROOF SUPPORT (RS4XA) (RS11A) (RS12A)

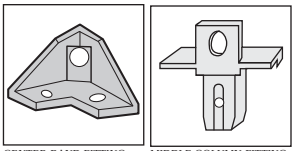
CENTER BAND FITTING (FCB)
MIDDLE COLUMN FITTING (FMC)

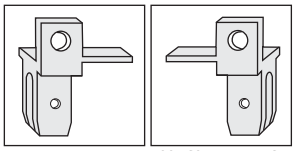
DOOR COLUMN FITTING (FDCL)
DOOR COLUMN FITTING (FDCR)

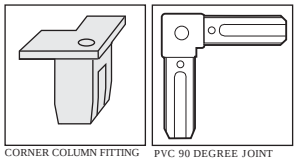
CORNER COLUMN FITTING (FCC)
PVC 90 DEGREE JOINT (RJ)

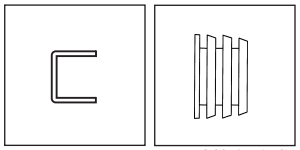
CENTER BAND COVER (CBC)
END PLUG SQUARE (EPS)

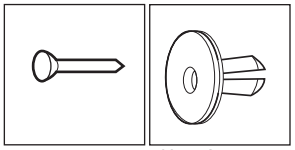
ROOF PIN (PIN)
ROOF PLUG WITH WASHER (PPG)

Tools You Will Need

- Cordless Drill - Philips Head
- Hammer or Rubber mallet
- Carpenters Square
- 8’ Step Ladder
- Adjustable pliers
- Level - 3ft.
- Tape Measure
- Caulk Gun
- Waterproof Clear Silicon
- Sealant
- Hand Gloves

10’ x 8’ Exploded View

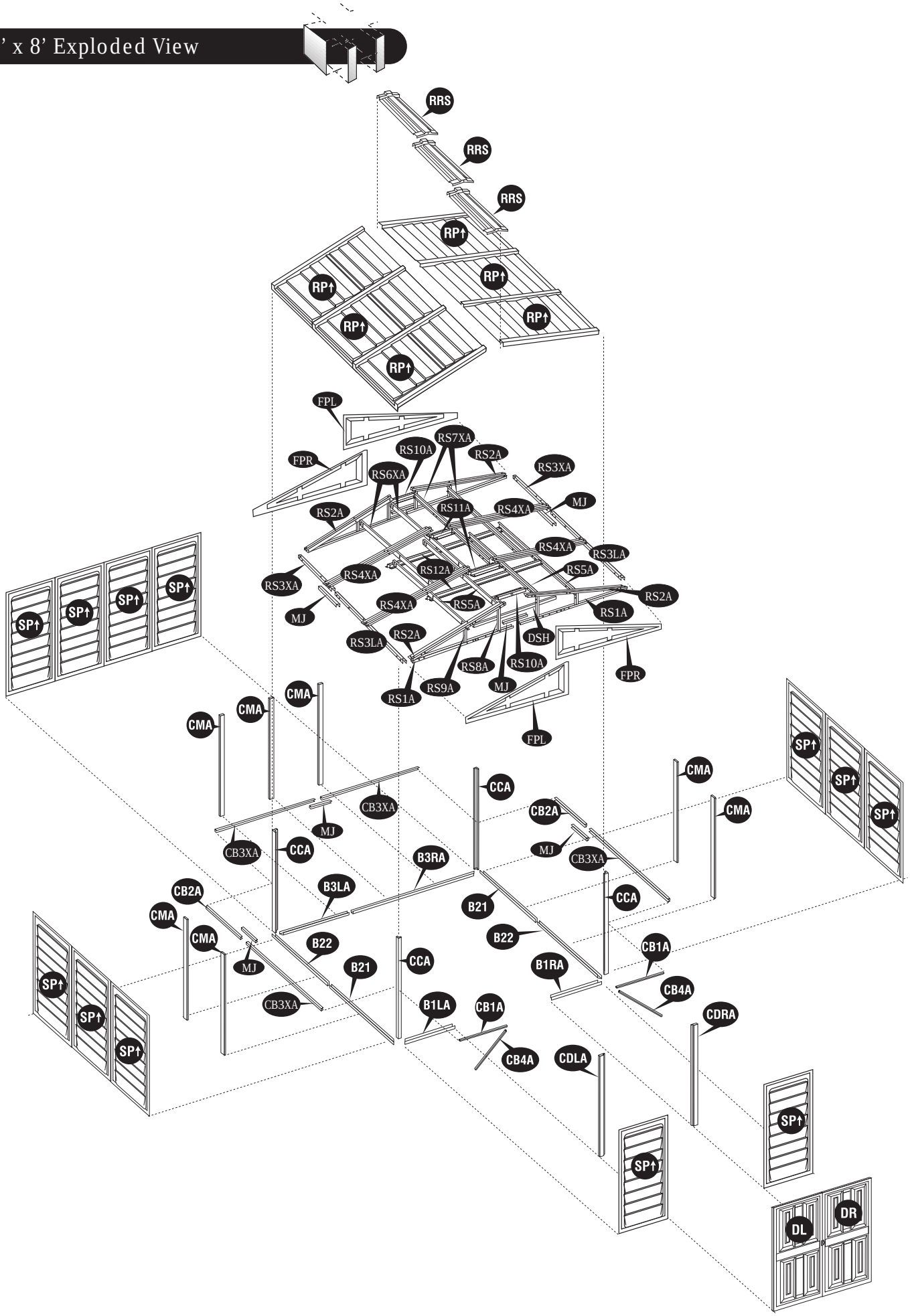

One Extension Parts List

Note: Check all parts prior to installation.

CODE	DESCRIPTION	QTY
EXTL	EXTENSION ‘U’ CHANNEL LEFT	1
EXTR	EXTENSION ‘U’ CHANNEL RIGHT	1
CMA	MIDDLE COLUMN	2
CB3A	CENTER BAND	2
RS3SA	RS3 ROOF STRUCTURE SHORT	2
RS4A	RS4 ROOF STRUCTURE	2
RS6A	RS6 ROOF STRUCTURE	2
RS7A	RS7 ROOF STRUCTURE	2
RS11A	RS11 ROOF STRUCTURE SUPPORT SHORT	1
RS12A	RS12 ROOF STRUCTURE SUPPORT LONG	1
RS13A	RS13 ROOF STRUCTURE	8
RS14A	SAGGING SUPPORT	4
SP↑	SIDE PANEL	2
RP↑	ROOF PANEL	2
RRS	RIDGE COVER	1

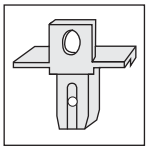
MIDDLE COLUMN FITTING (FMC)

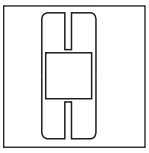
MIDDLE COLUMNS (CMA)

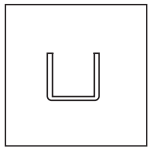
ROOF STRUCTURES (RS3SA) (CB3A)

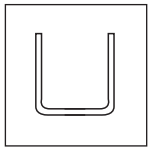
U-Channels (EXTL) (EXTR)

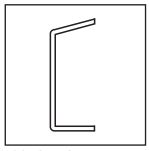
ROOF STRUCTURE (RS6A) (RS7A) (RS13A)

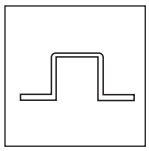
ROOF SUPPORT (RS4A) (RS11A) (RS12A)

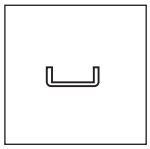
SAGGING SUPPORT (RS14A)

ACCESSORIES

CODE	DESCRIPTION	QTY
FMC	MIDDLE COLUMN FITTING	2
PPG	ROOF PLUG W/WASHER	16
PIN	ROOF PIN	16
S1	DIA. 4.2 x 16mm. (5/32” x 5/8”) SHEET METAL SCREW	40
S3	M4 x 10mm. (M5/32” x 3/8”) MACHINE SCREW WITH NUT	56

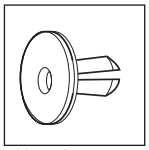
ROOF PLUG WITH WASHER (PPG)

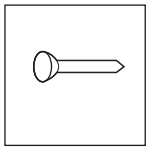
ROOF PIN (PIN)

Exploded View with One Extension

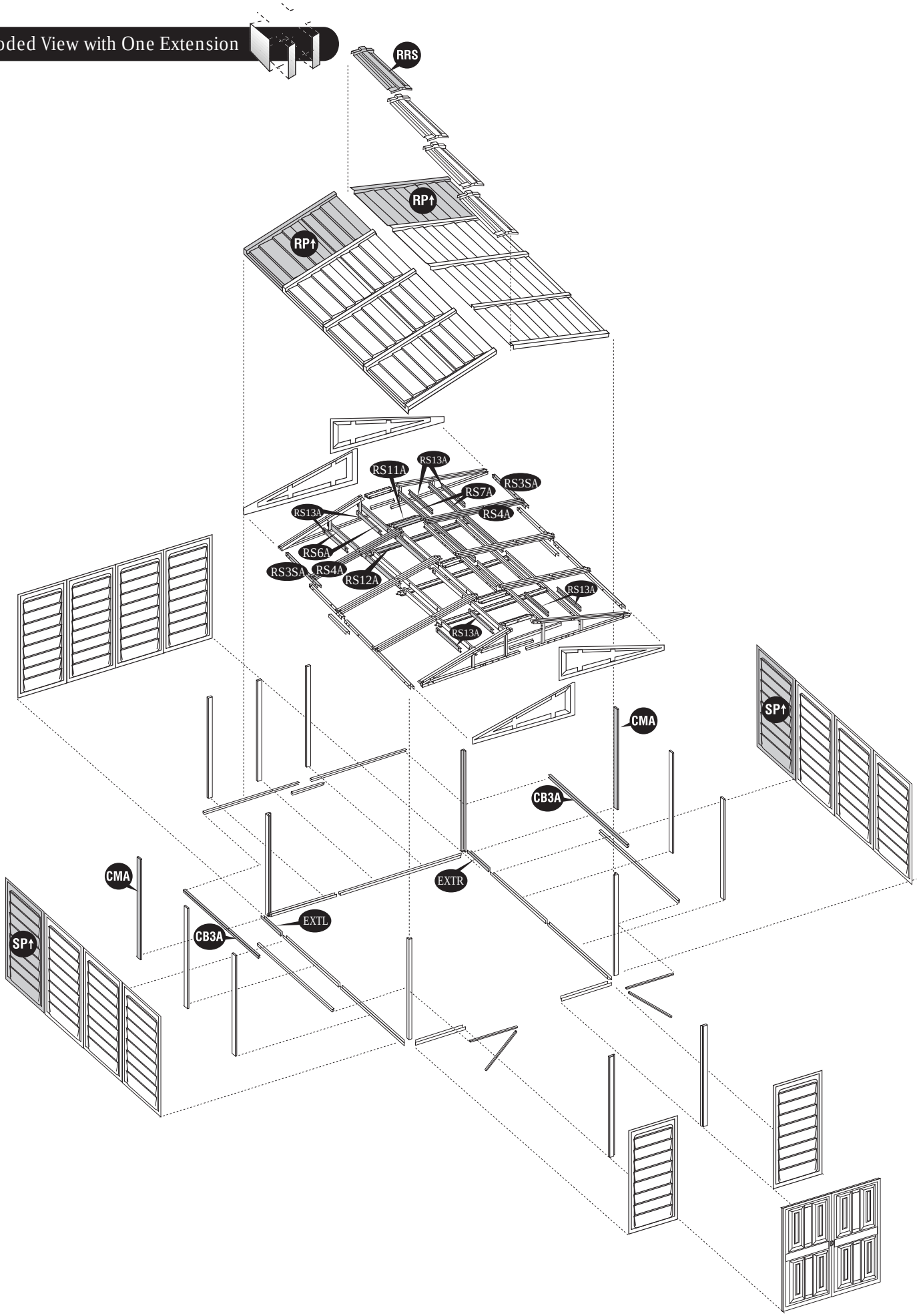

A. Foundation & Base Frame

Note: It is important that these instructions are followed step by step.

DuraMax must be installed on a level wooden platform or a level concrete foundation.

Note

Wooden platform is extra and is not included. Don't install under windy conditions.

Parts needed:

(1) Front U channel left (B1LA)
(1) Front U channel right (B1RA)
(1) Back U channel left (B3LA)
(1) Back U channel right (B3RA)
(2) Side U channel (B21)
(2) Side U channel (B22)
(32) Dia. 4.2 x 16mm Screws (S1)

Parts needed for each Extension:

(1) Extn. U channel left (EXTL)
(1) Extn. U channel right (EXTR)
(6) Dia. 4.2 x 16mm Screws (S1)

1. Use pressure treated 2" x 4" (5x10cm) to build a foundation stucture that has an outside dimension of 96" x 127" (2438.4mm x 3225.8mm).

1a. Use pressure treated 2" x 4" (5x10cm) to build a foundation stucture that has an outside dimension of 32" x 127" (812.8mm x 3225.8mm) for each extension.

OR 1b. Use pressure treated 2" x 4" (5x10cm) to build a foundation stucture that has an outside dimension of 128" x 127" (3251.2mm x 3225.8mm) for shed with one extension.

Note

Lay 2"x 4" (5x10cm) Flat

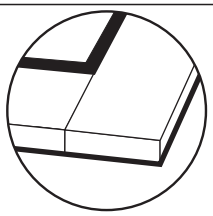

2. Using exterior grade CDX 3/4" (19mm) plywood, cut and fit together the sheets to form solid plywood floor as shown. Foundation must be square and level.

3. Start with U-Channel bases (B3LA) & (B3RA) to insure a quick and accurate layout.
Position all U channel bases on wood foundation. It is critical that you allow 61 1/4" (1556mm) between front bases (B1LA) and (B1RA) for door placement. Measure in all directions as shown in fig.1. Make sure the U-channel assembly is a perfect square.

3a. For each extension add one (EXTL) & (EXTR) in the back side, moving (B3LA) & (B3RA) backwards.

PART 1: Assembling Shed With Extension Kit

Wooden Platform (Not Included)

The following are a list of lumber and sizes you will need.

Pressure Treated-Wood Studs:
6ea 2"x 4"x 89" (50 x 88.9x 2260.6mm)
2ea 2"x 4"x 127" (50 x 88.9 x 3225.8mm)

Exterior Grade (CDX):
3/4" (19mm) plywood
2ea 3/4"x 48"x 96" (19 x 1219.2 x 2438.4mm)
1ea 3/4"x 31 "x 96" (19x 787.4mm x 2438.4mm)

L-Brackets: 4ea

Wooden Platform (each Extension) (Not Included)

The following are a list of lumber and sizes you will need.

Pressure Treated-Wood Studs:
2ea 2"x 4"x 127" (50 x 88.9 x 3225.8mm)
3ea 2"x 4"x 25" (50 x 88.9 x 635mm)

Exterior Grade (CDX):
3/4" (19mm) plywood
2ea 3/4"x 32"x 63 1/2" (19 x 812.8 x 1612.9mm)

L-Brackets: 4ea

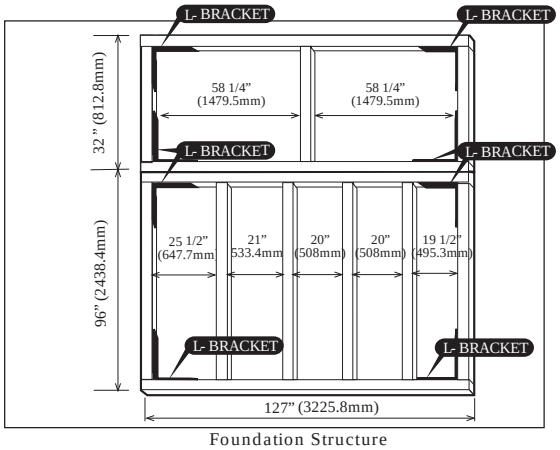

Foundation Structure

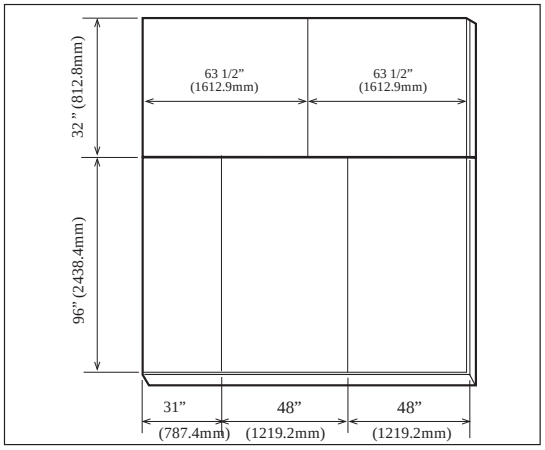

Plywood Floor

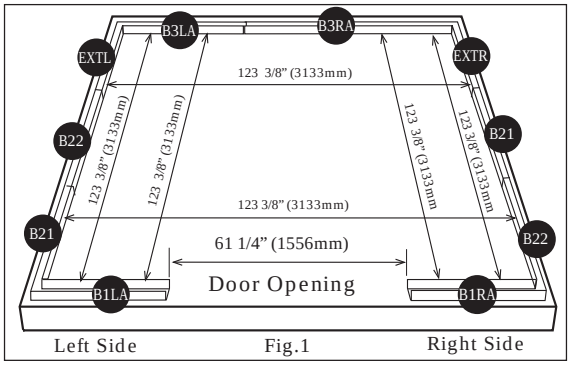

U-Channel Layout

4. Using a carpenters square, line up all corners. Secure base to wood foundation using (S1) screws.

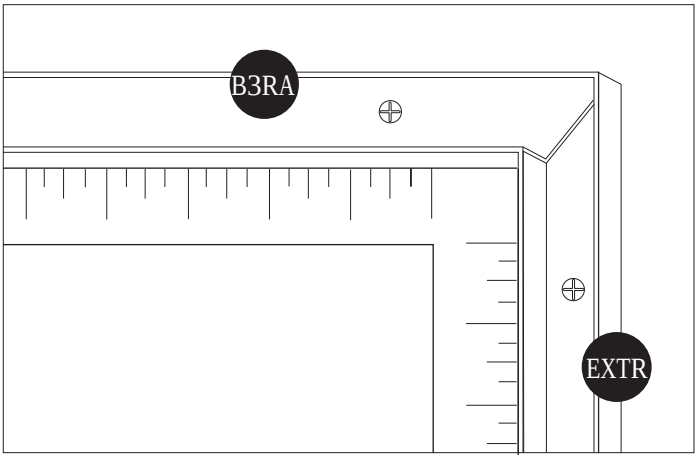

Concrete foundation

4b. Shed or shed foundation should be placed on concrete footing by use of anchor bolt and nut. Using a carpenters square, line up corners. Align U-Channel base, mark the concrete through the holes in the base and drill concrete with 1/2" (dia. 12.5mm) concrete bit to accept anchor bolts to a 1 3/4" (44mm) depth. Replace base and secure with 1/4" x 1 1/2" (M6 x 40mm) anchor bolts. (not provided)

B. Walls & Columns

Note *All panels are clearly marked and care should be taken to use the correct one.*

Parts Needed:

(4) Corner Column	(CCA)
(1) Left Door Column	(CDLA)
(1) Right Door Column	(CDRA)
(7) Middle Column	(CMA)
(12) Side Panels	(SP↑)
(2) Front Center Band	(CB1A)
(4) Center Band	(CB3XA)
(3) Middle Joining Support	(MJ)
(2) Front Cross Center Band	(CB4A)
(4) Center Band Fitting	(FCB)
(3) Center Band Cover	(CBC)

Parts Needed for each Extension:

(2) Middle Column	(CMA)
(2) Side Panels	(SP↑)
(2) Center Band	(CB3A)

TIP *Layout all required parts near shed foundation.*

1. Slide door column (CDRA)into the U-Channel Base (B1RA) on the right side of the door. Line up the pre-drilled holes on (CDRA) Column with pre-drilled holes on U-Channel Base. Secure with two (S1) screws from inside.
(See blowup detail)

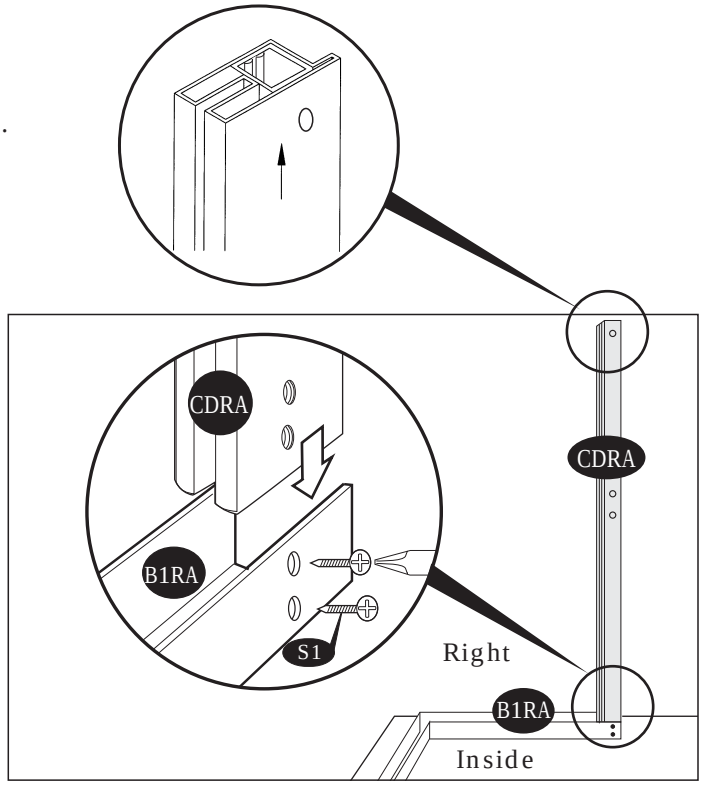

2. Insert the side panel (SP↑) into the groove of column (CDRA). Start at the bottom of the panel at an angle then push into place.

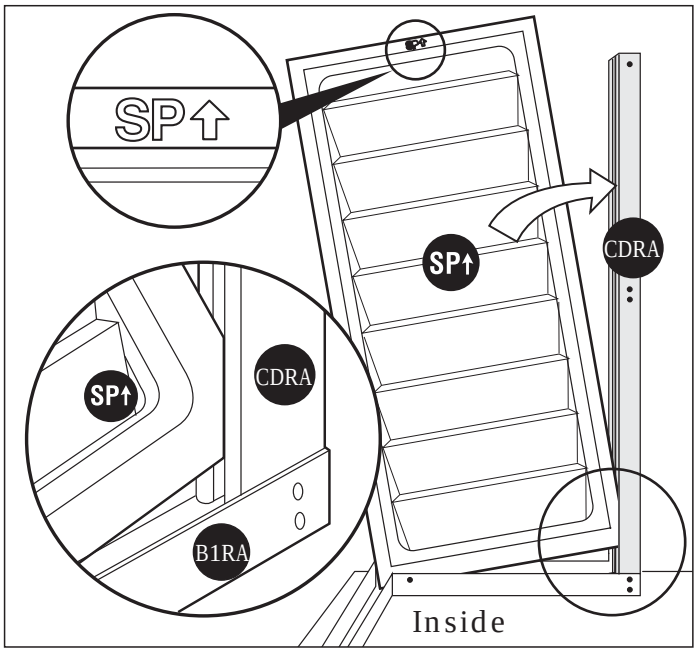

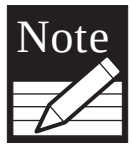

Always place panels into frame at an angle on top and slide in sideways and downward for easy insertion.

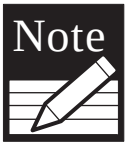

Make sure panels are right side up with panel shingles facing down. Check the stamped label on top of all panels.

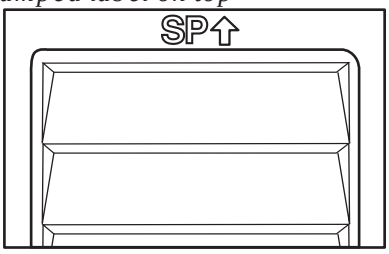

3. Slide corner column (CCA) into side panel (SP↑) pushing the column to the side panel.

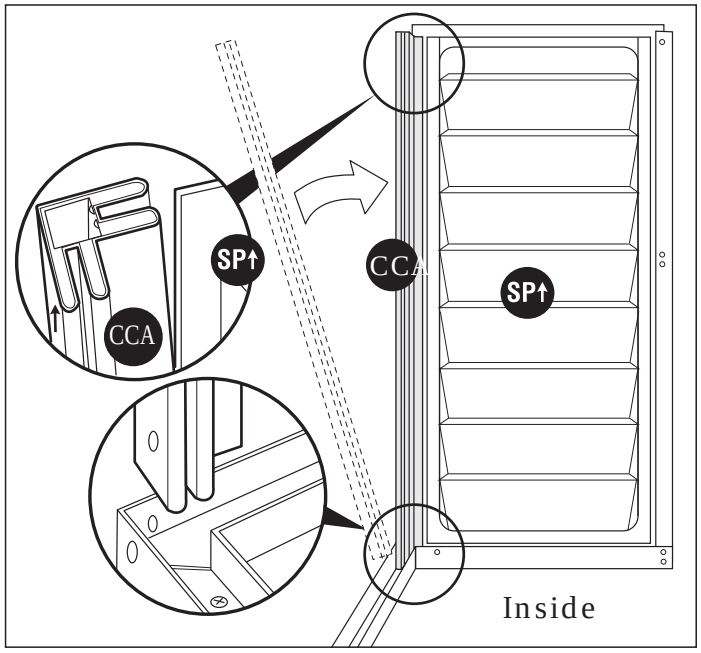

4. Working outside use (S1) screws to secure column to bases (B1RA) and (B22).

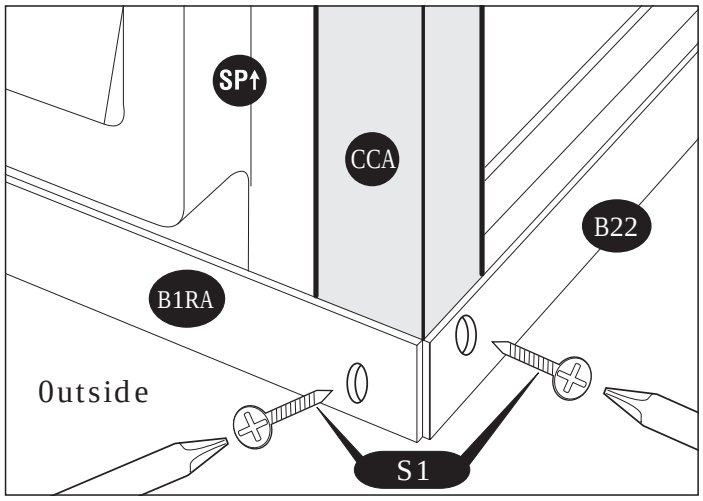

5. To stabilize the front panel attach center band (CB1A). Start with center band fitting (FCB), fix to corner column (CCA) with (S2) screws. See figures (fig.1) (fig.2) and (fig.3).

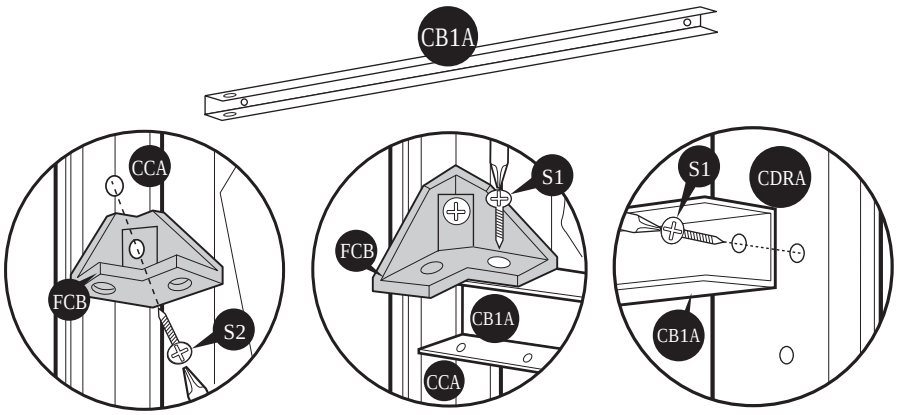

Fig.1: Use (S2) screws. Fix (FCB) fitting to (CCA). Leave it loose.

Fig.2: Use (S1) screws. Fix (CB1A) to fitting (FCB)

Fig.3: Use (S1) screw. Fix (CB1A) to (CDRA)

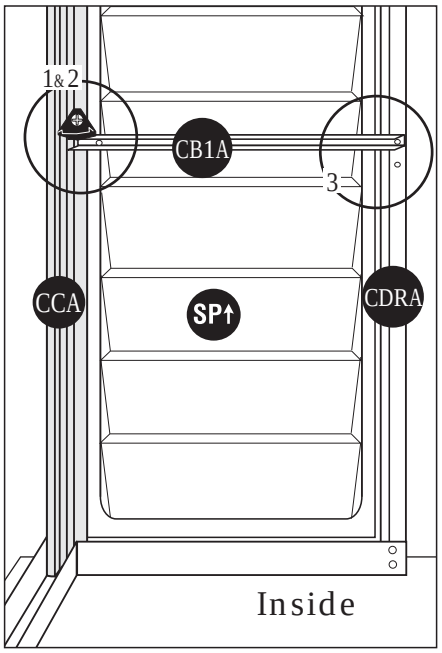

6. Attach center band (CB4A) to door column (CDRA) and base channel (B1RA).

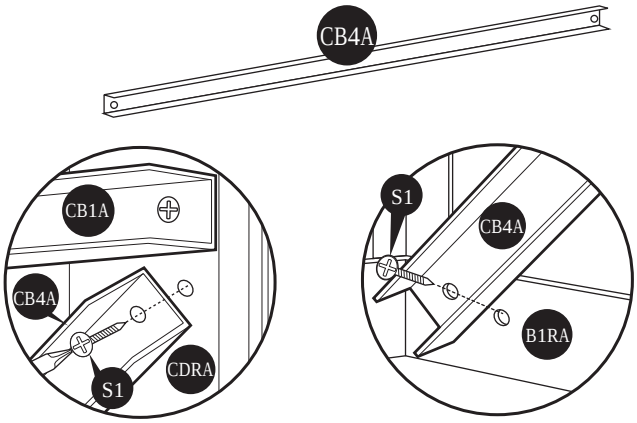

Fig.1: Use (S1) screw. Fix (CB4A) to (CDRA)

Fig.2: Use (S1) screw. Fix (CB4A) to base (B1RA)

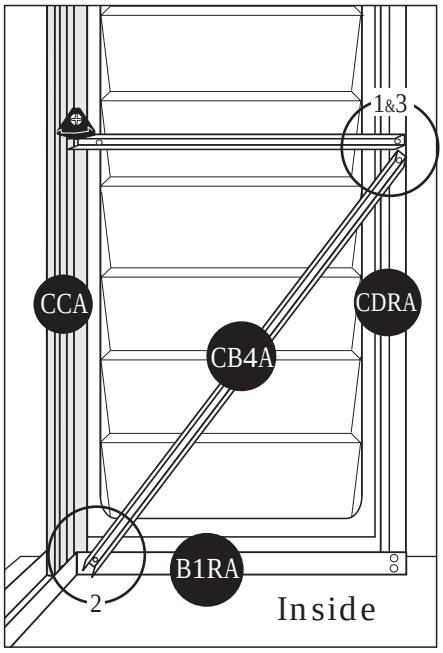

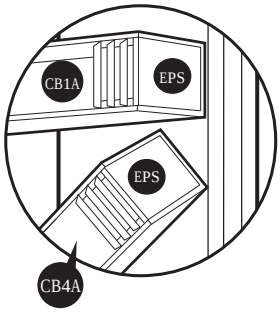

Fig.3: Fix the (EPS) at the end of (CB1A) & (CB4A).

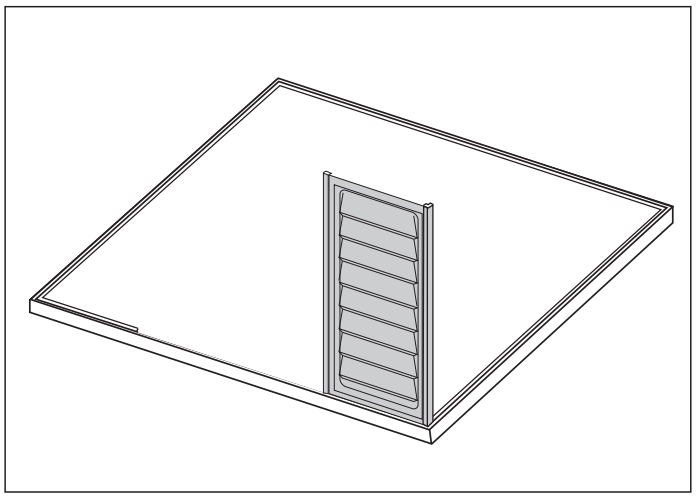

7. Assemble the center bands (CB3XA) & (CB3XA) with middle joining support (MJ). use (S1) screws. See fig.

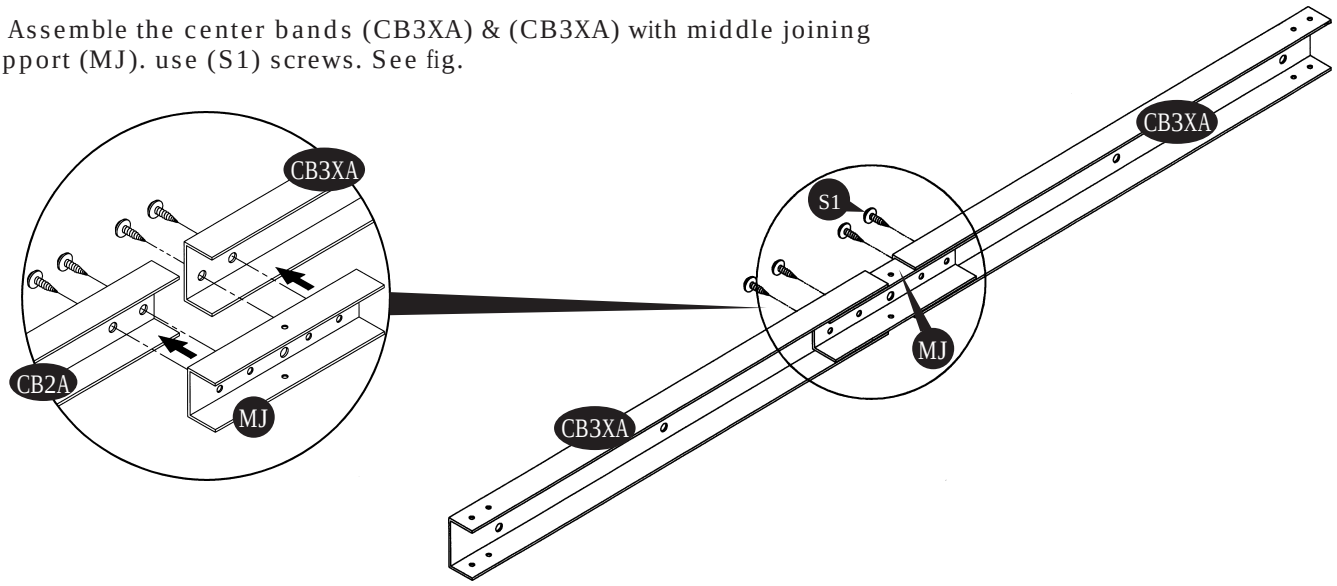

8. Assemble the center bands (CB3XA) & (CB3A) with (S3) screws with nuts. Follow Overlapping Method shown below.
Make 2 sets.
Add one (CB3A) for each extension.

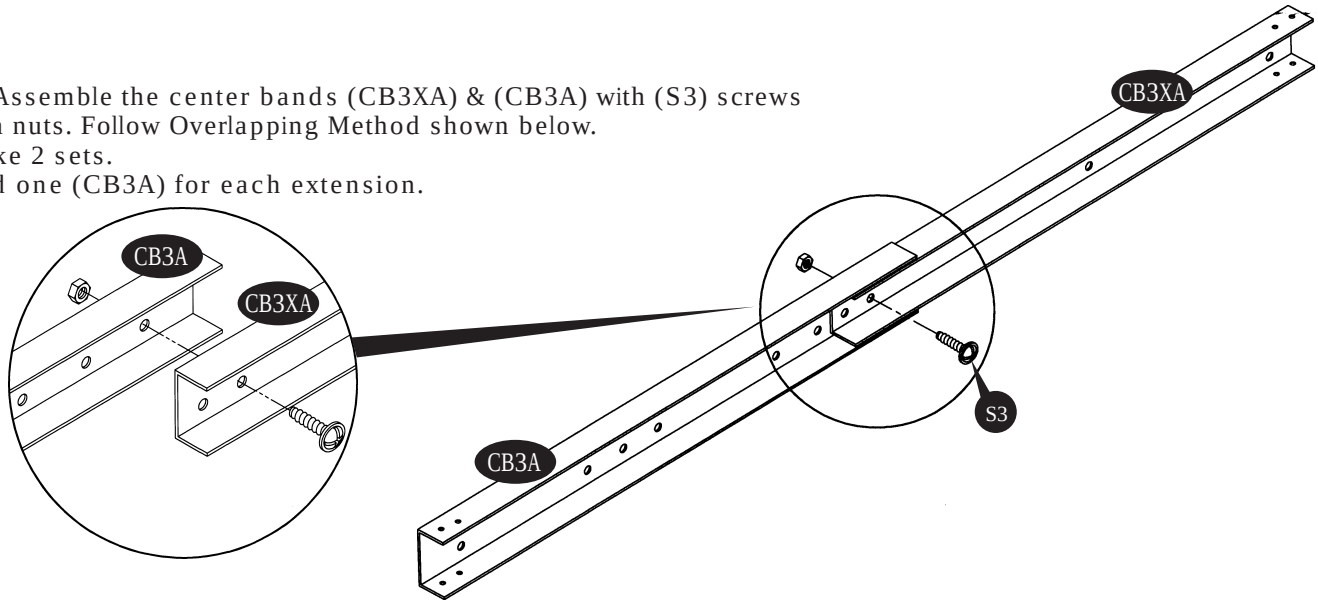

Overlapping Method

For Center Band & Roof structure (RS3).

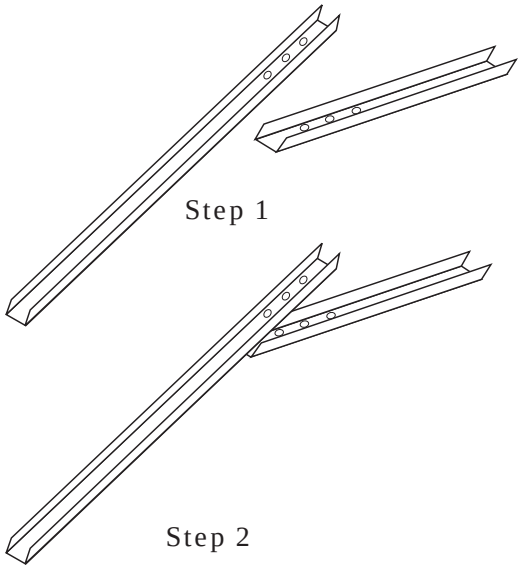

Use a hammer to align the holes.

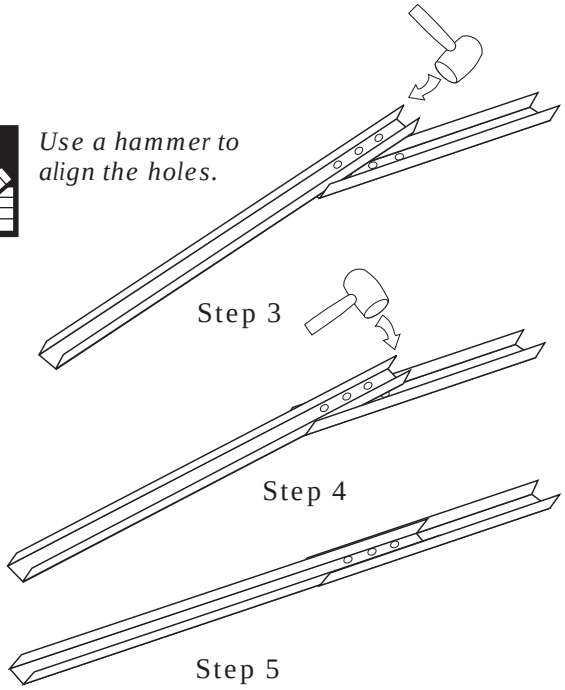

9. Working from inside continue connecting the side panels (SP↑) and columns (CMA) in sequence along (B22 & B21) & (EXTR) base. Use (S1) screws to fix columns to base.

9a. For each extension add one side panel (SP↑) and one column (CMA) in extension base U-channel (EXTR) & (EXTL).

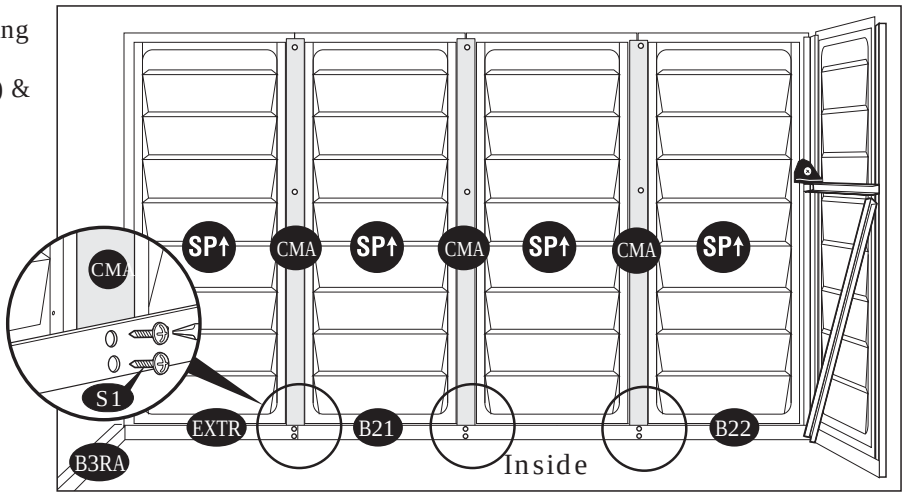

10. Slide corner column (CCA) into side panel (SP↑) pushing the column to the side panel.

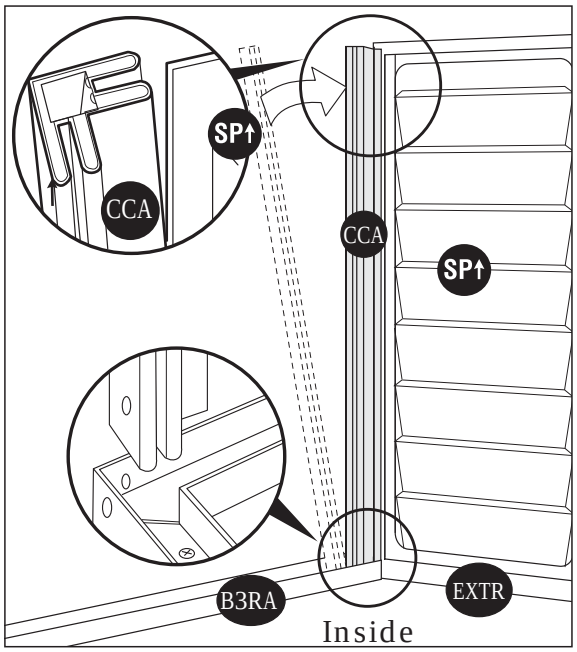

11. Working outside Use (S1) screws to secure column to bases (EXTR) and (B3RA).

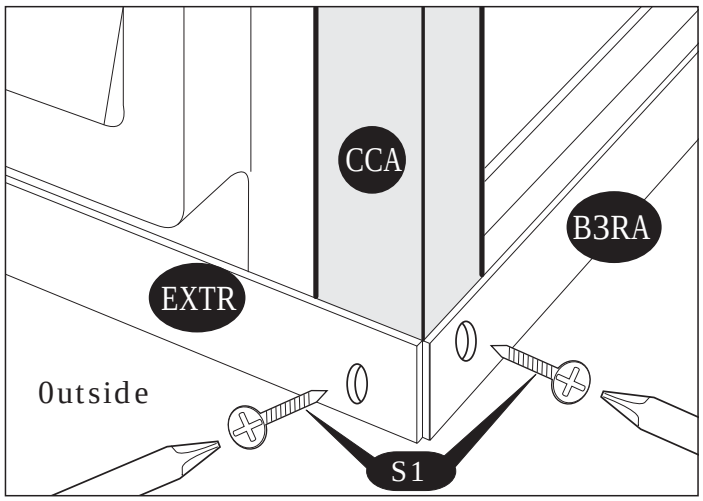

12. Stabilize the side panels with center bands (CB3XA) & (CB3A). Fix (FCB) fitting to corner column (CCA). See Fig.1 Follow the Fig. 2, 3, 4, 5 & 6.

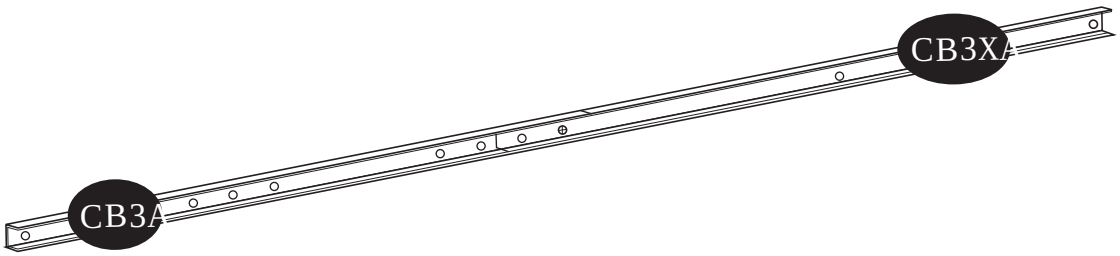

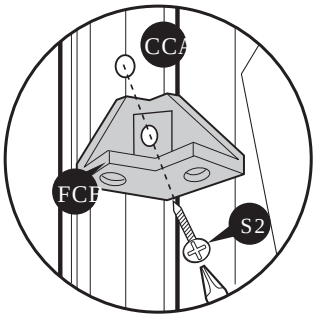

Fig.1: Use (S2) screws. Fix (FCB) fitting to (CCA). Leave it loose.

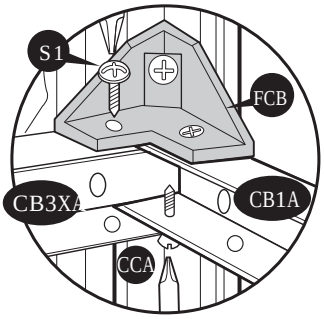

Fig.2: Use (S1) screws. Fix (CB3XA) to (FCB) and (CB1A)

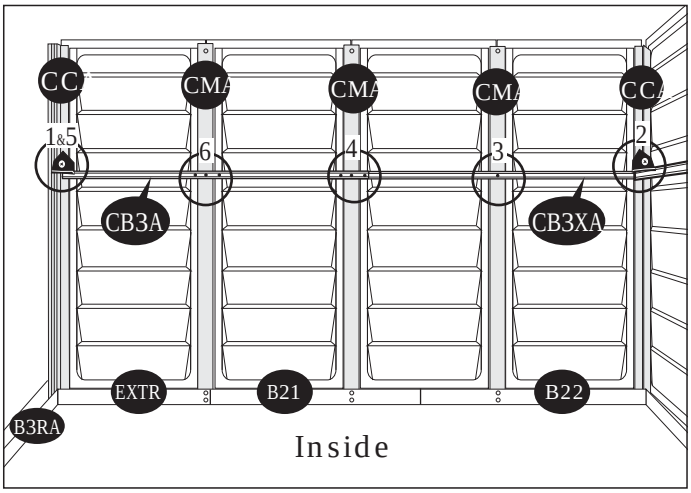

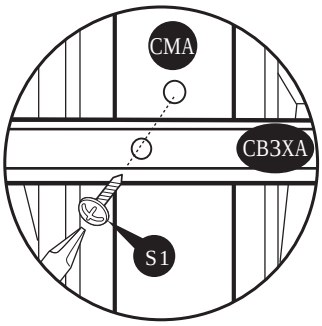

Fig.3: Use (S1) screws. Fix (CB3XA) to (CMA) columns.

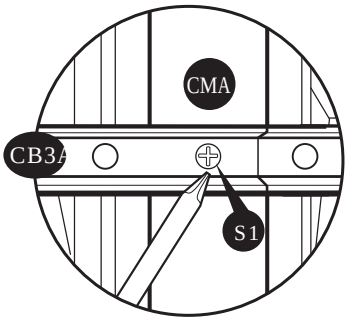

Fig.4: Fix to (CMA) with (S1) screw.

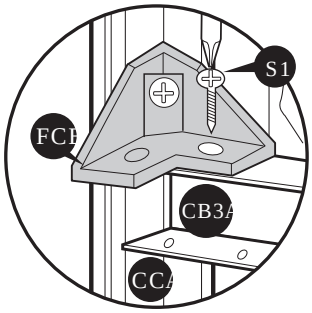

Fig.5: Use (S1) Screws. Fix (CB3A) to (FCB) fitting.

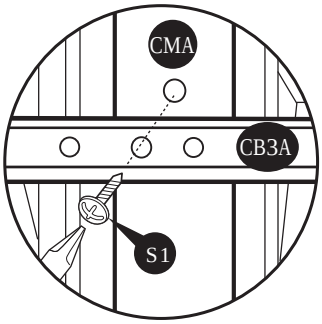

Fig.6: Use (S1) screws. Fix (CB3A) to (CMA) columns.

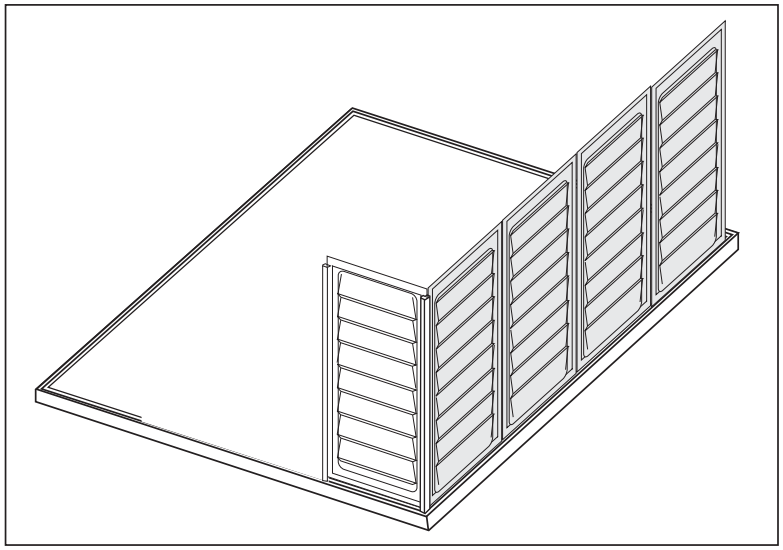

13. Working from inside continue connecting the 4 back panels (SP↑) and columns (CMA) in sequence along (B3RA) & (B3LA) base to corner column (CCA). Use (S1) screws to fix columns to base. Slide corner column (CCA) into side panel (SP↑) pushing the column into position. See (fig.1) and (fig.2).

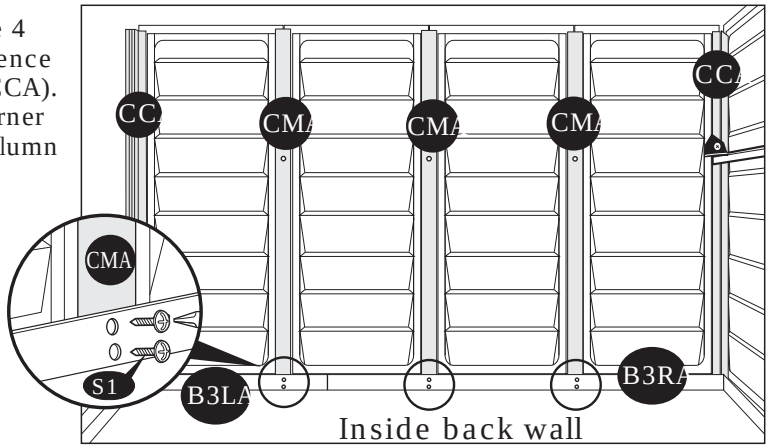

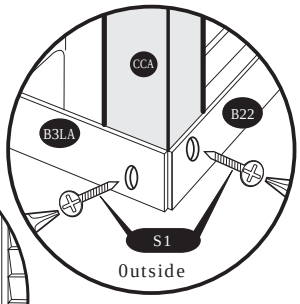

fig. 2

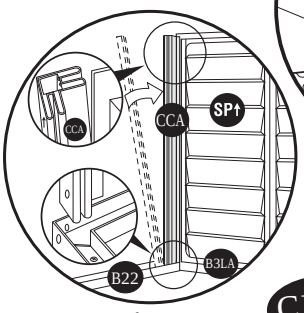

fig. 1

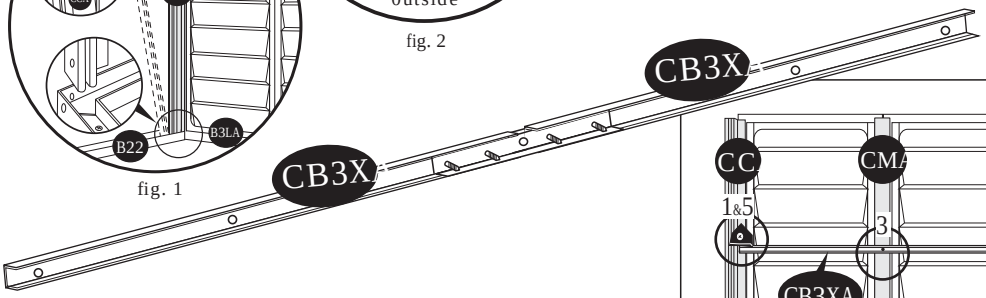

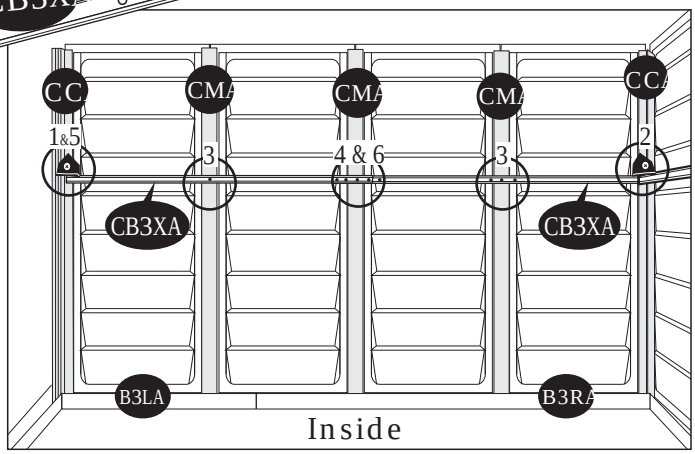

14. Stabilize the side panels with center bands (CB3XA) assembly. Fix center band fitting (FCB) to corner column (CCA) with (S2) screws. See Fig. 1 Follow the Fig. 1, 2, 3, 4, 5 & 6.

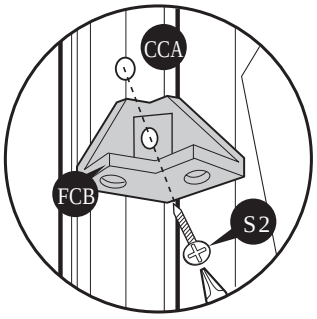

Fig.1: Use (S2) screws. Fix (FCB) fitting to (CCA). Leave it loose.

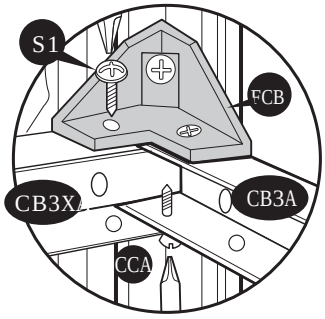

Fig.2: Use (S1) screws. Fix (CB3XA) to (FCB) and (CB3A).

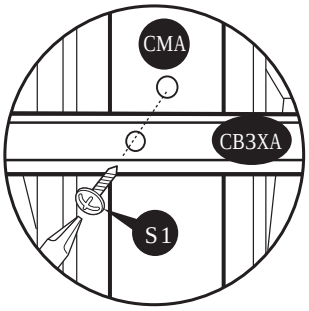

Fig.3: Use (S1) screws. Fix (CB3XA) to (CMA)

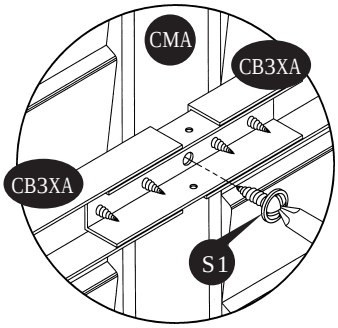

Fig.4: Fix to (CMA) with (S1) screw.

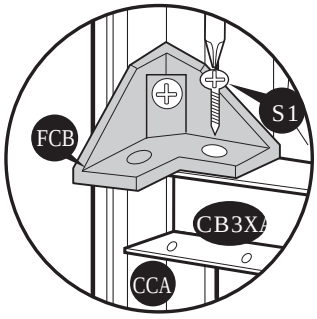

Fig.5: Use (S1) Screws. Fix (CB3XA) to (FCB) fitting.

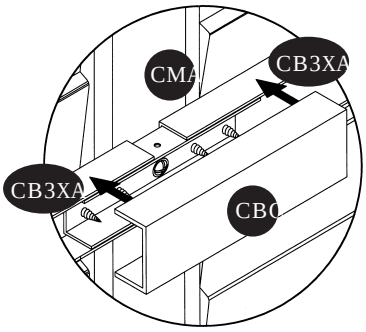

Fig.6: Center band joint must be cover with (CBC) cover to avoid the injury.

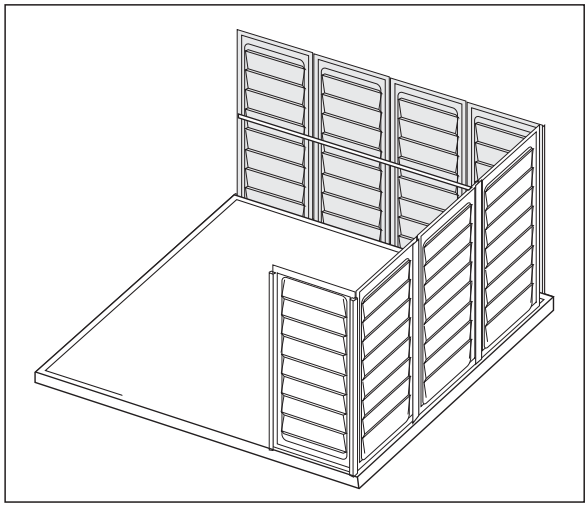

15. Working from inside continue connecting the side panels (SP↑) and columns (CMA) in sequence along (EXTL) (B22 & B21) base. Use (S1) screws to fix columns to base.

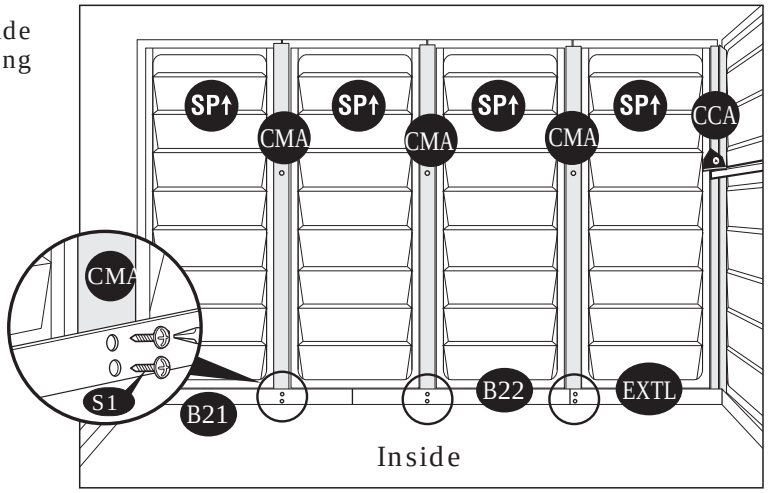

16. Slide corner column (CCA) into side panel (SP↑) pushing the column to the panel.

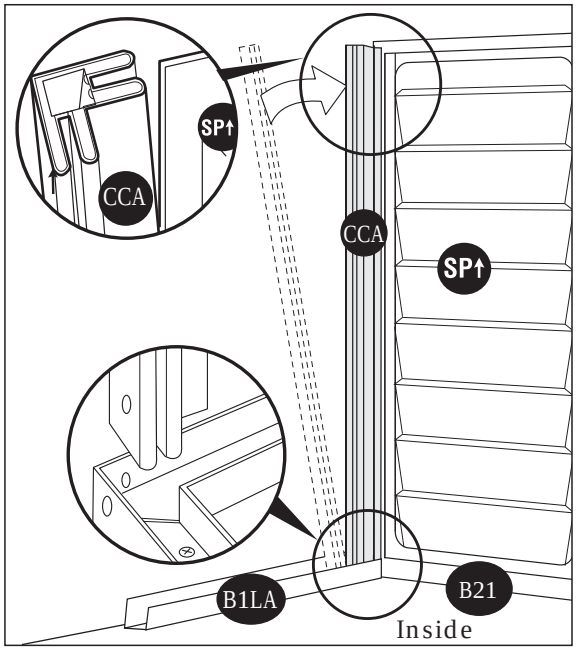

17. Working outside Use (S1) screws to secure column to bases (B21) and (B1LA).

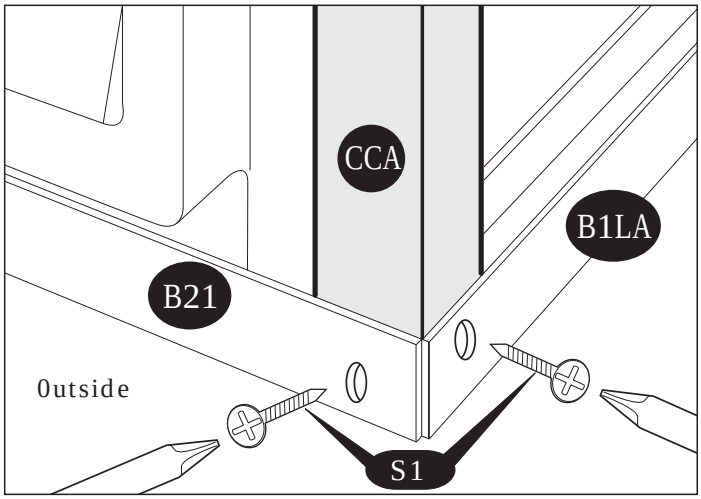

18. Stabilize the side panels with center bands (CB3XA) & (CB3A). Fix (FCB) fitting to corner column (CCA). See Fig.1 Follow the Fig. 2, 3, 4, 5 & 6.

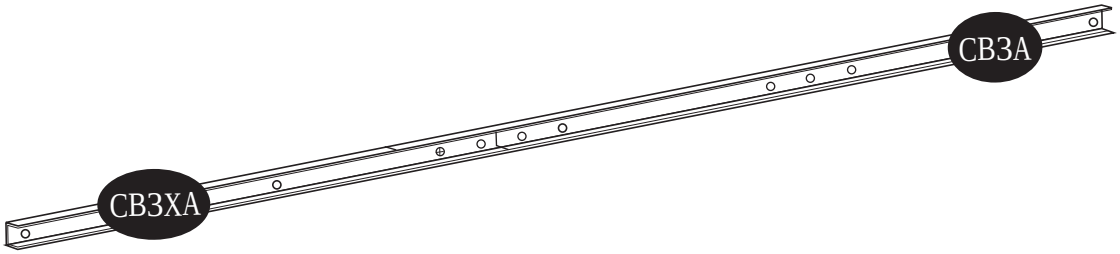

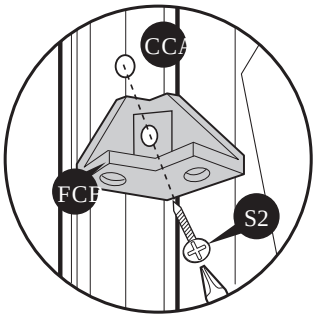

Fig.1: Use (S2) screws. Fix (FCB) fitting to (CCA). Leave it loose.

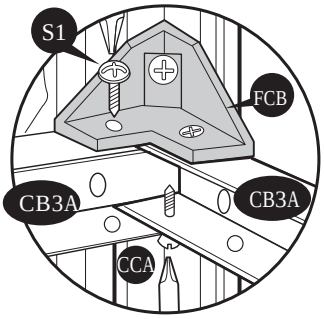

Fig.2: Use (S1) screws. Fix (CB3A) to (FCB) and (CB1A)

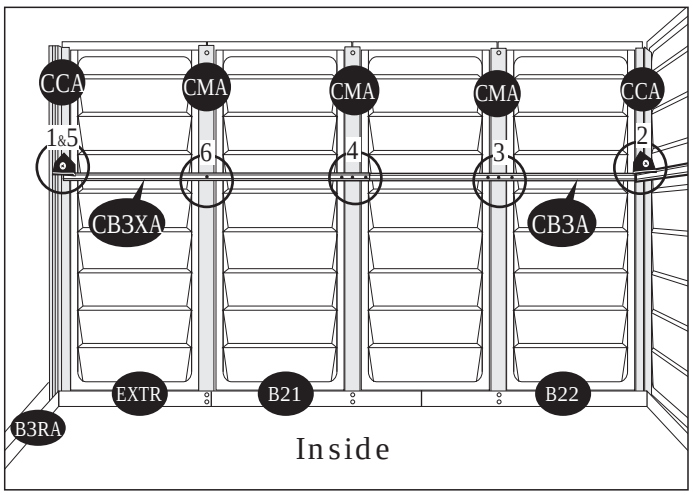

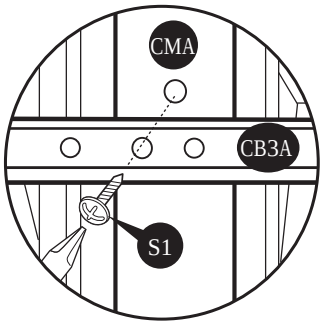

Fig.3: Use (S1) screws. Fix (CB3A) to (CMA) columns.

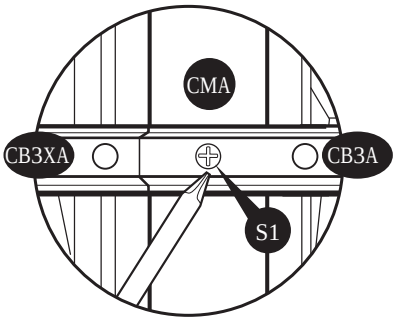

Fig.4: Fix to (CMA) with (S1) screw.

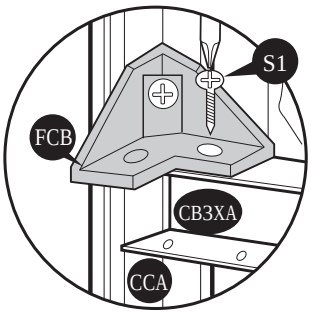

Fig.5: Use (S1) Screws. Fix (CB3XA) to (FCB) fitting.

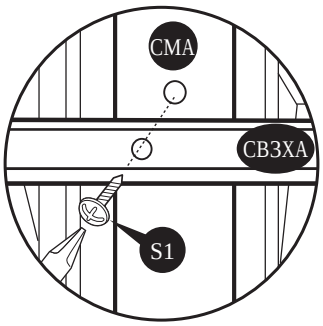

Fig.6: Use (S1) screws. Fix (CB3XA) to (CMA) columns.

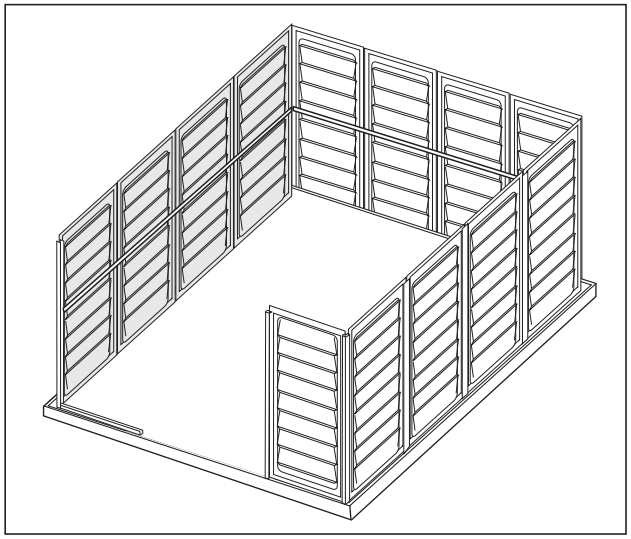

19. Insert the side panel (SP↑) into the groove of column (CCA). Start at the bottom with panel at an angle then push into place.

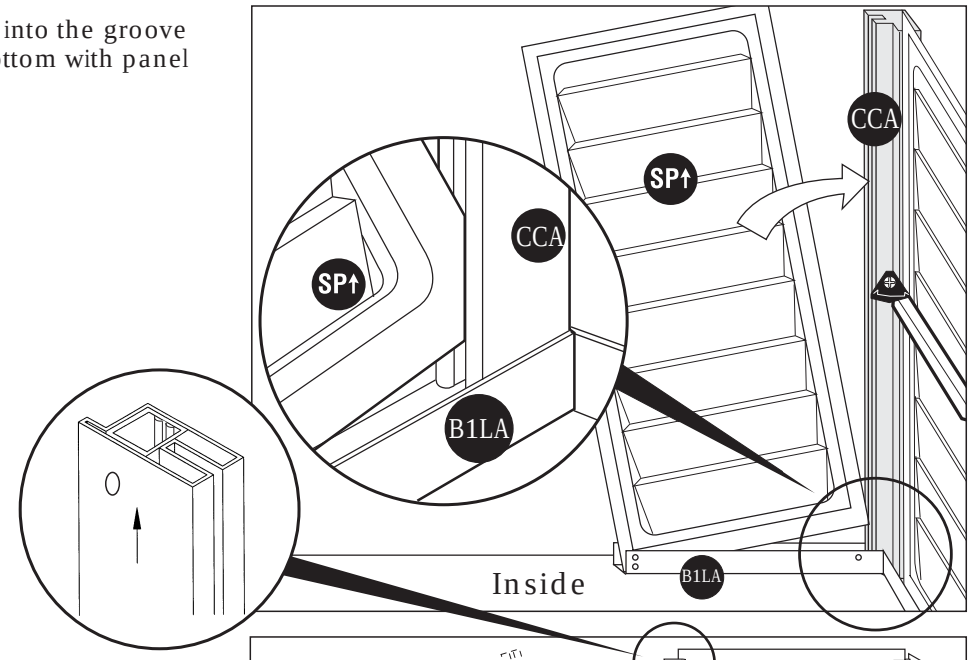

20. Slide door column (CDLA) into the U-Channel Base (B1LA) on the left side of the door. Line up the pre-drilled holes on (CDLA) Column with pre-drilled holes on U-Channel Base (B1LA). Fix with two (S1) screws from inside. (see blowup detail).

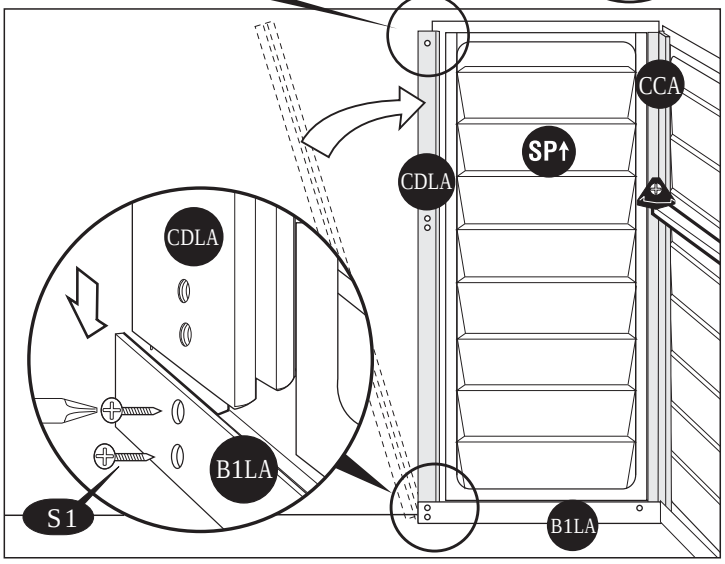

21. To stabilize the front panel attach center band (CB1A). See figures (fig.1) (fig.2).

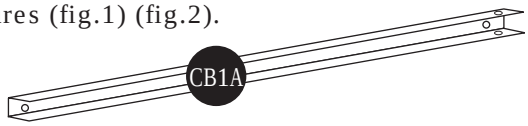

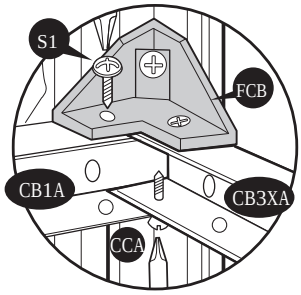

Fig.1: Use (S1) screws. Fix (CB1A) to fitting (FCB) & (CB3XA)

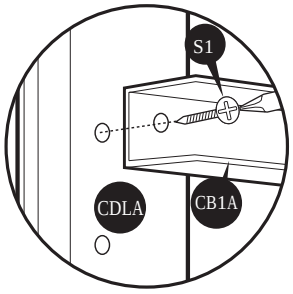

Fig.2: Use (S1) screw. Fix (CB1A) to (CDLA)

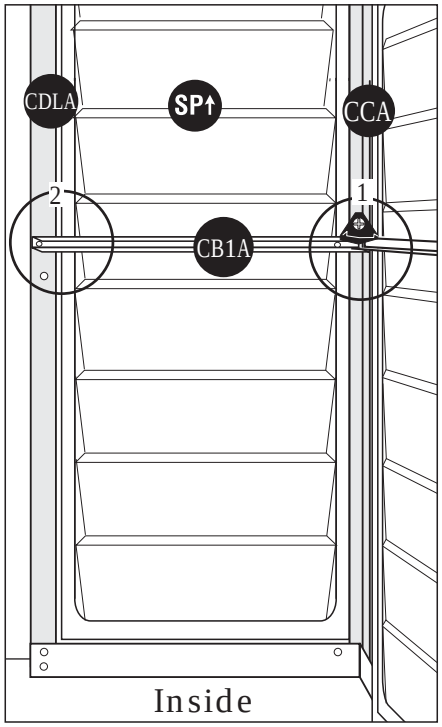

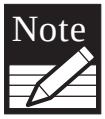

After completing the center band assembly fully tighten the four center band fittings (FCB) to the corner column (CCA).

22. Fix center band (CB4A) to (CDLA) and Base (B1LA)
See figures (fig.1), (fig.2) and (fig.3).

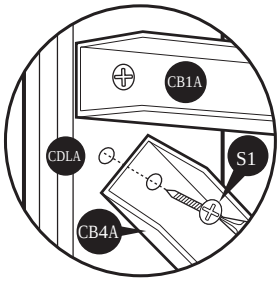

Fig.1: Use (S1) screw. Fix (CB4A) to (CDLA)

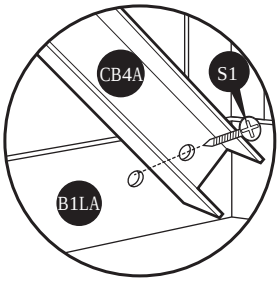

Fig.2: Use (S1) screw. Fix (CB4A) to base (B1LA)

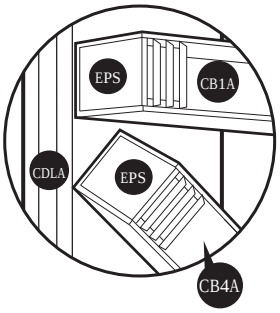

Fig.3: Fix the (EPS) at the end of (CB1A) & (CB4A).

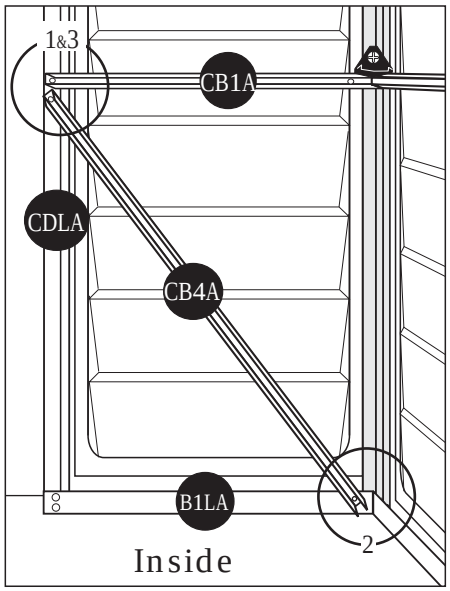

23. Make sure the door opening between the door columns (CDLA) and (CDRA) is 61 1/4" (1556mm). This will ensure a perfect fit for the doors.

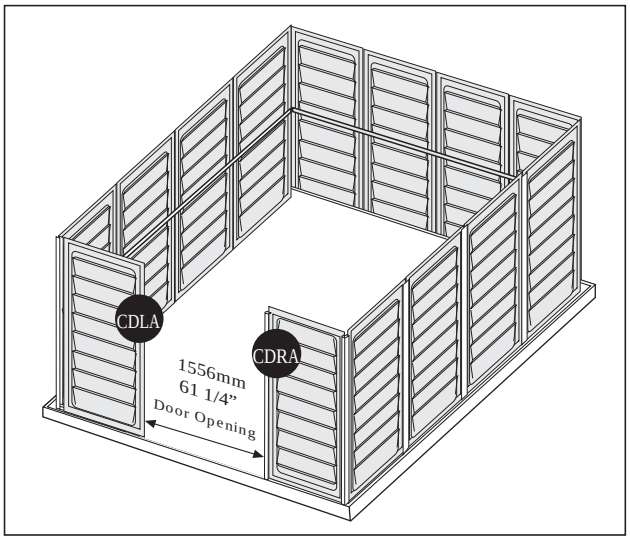

C. Roof Frame

Parts Needed:

(4) RS1 Roof Structure	(RS1A)
(4) RS2 Roof Structure	(RS2A)
(2) RS3 Roof Structure Long	(RS3LA)
(2) RS3 Roof Structure Short	(RS3XA)
(4) RS4 Roof Structure	(RS4XA)
(4) RS5 Roof Structure	(RS5A)
(2) RS6 Roof Structure	(RS6XA)
(2) RS7 Roof Structure	(RS7XA)
(4) RS8 Roof Structure Support Long	(RS8A)
(4) RS9 Roof Structure Support Short	(RS9A)
(4) Middle Joining Support	(MJ)
(2) RS10 Roof Structure Support	(RS10A)
(2) RS11 Roof Structure Support Short	(RS11A)
(2) RS12 Roof Structure Support Long	(RS12A)
(1) Door Stopper Horizontal	(DSH)
(1) Door Column Fitting Left	(FDCL)
(1) Door Column Fitting Right	(FDCR)
(4) Corner Column Fitting	(FCC)
(7) Middle Column Fitting	(FMC)
(4) 90 Degree Joint	(RJ)

Parts Needed for each extension:

(2) RS3 Roof Structure Short	(RS3SA)
(2) RS4 Roof Structure	(RS4A)
(2) RS6 Roof Structure	(RS6A)
(2) RS7 Roof Structure	(RS7A)
(1) RS11 Roof Structure Support Short	(RS11A)
(1) RS12 Roof Structure Support Long	(RS12A)
(8) RS13 Roof Structure	(RS13A)
(2) Middle Column Fitting	(FMC)

1. Insert the middle column fitting (FMC) into top of the middle columns (CMA). Fix the column to fittings with (S1) screws from inside the shed.

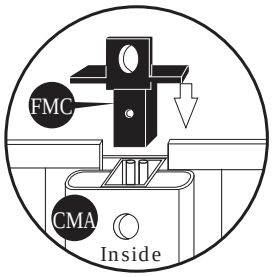

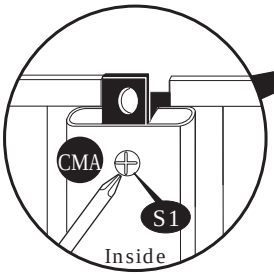

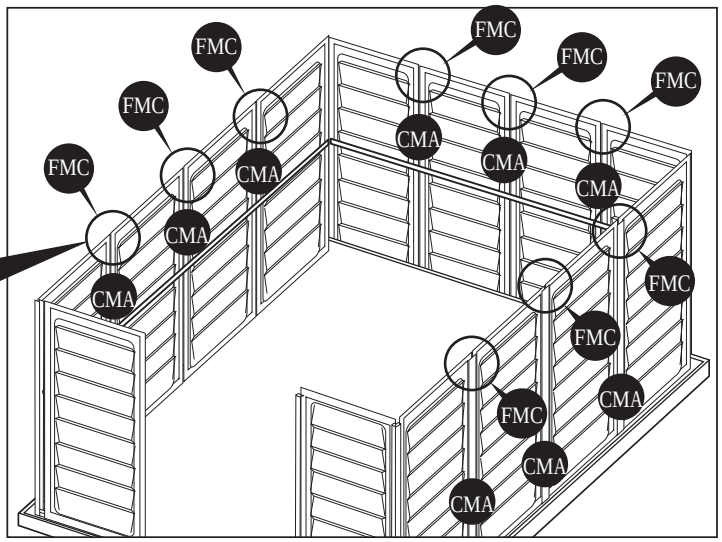

2. Insert the corner column fittings (FCC) into the corner columns (CCA). Fix with (S1) screws from out side of the shed.

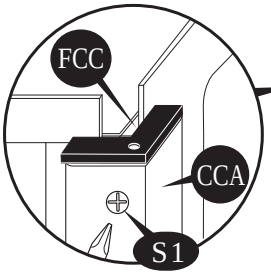

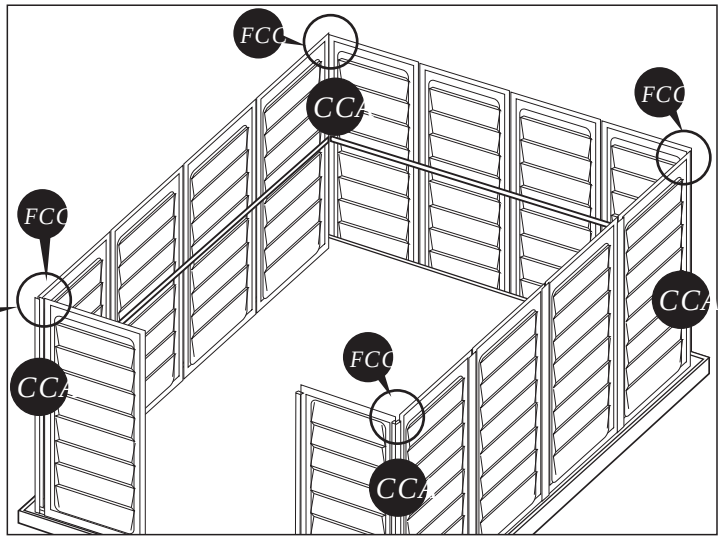

3. Insert the door column fittings (FDCL) and (FDCR) left and right into the door columns (CDLA) and (CDRA). Fix with (S1) screws from inside the shed.

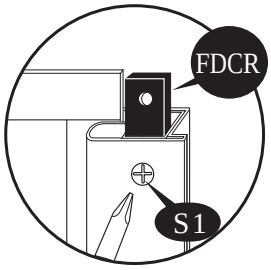

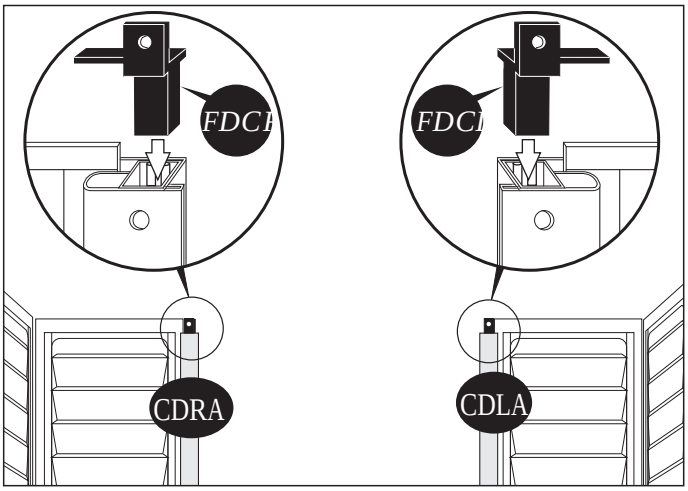

Roof Structure Exploded View

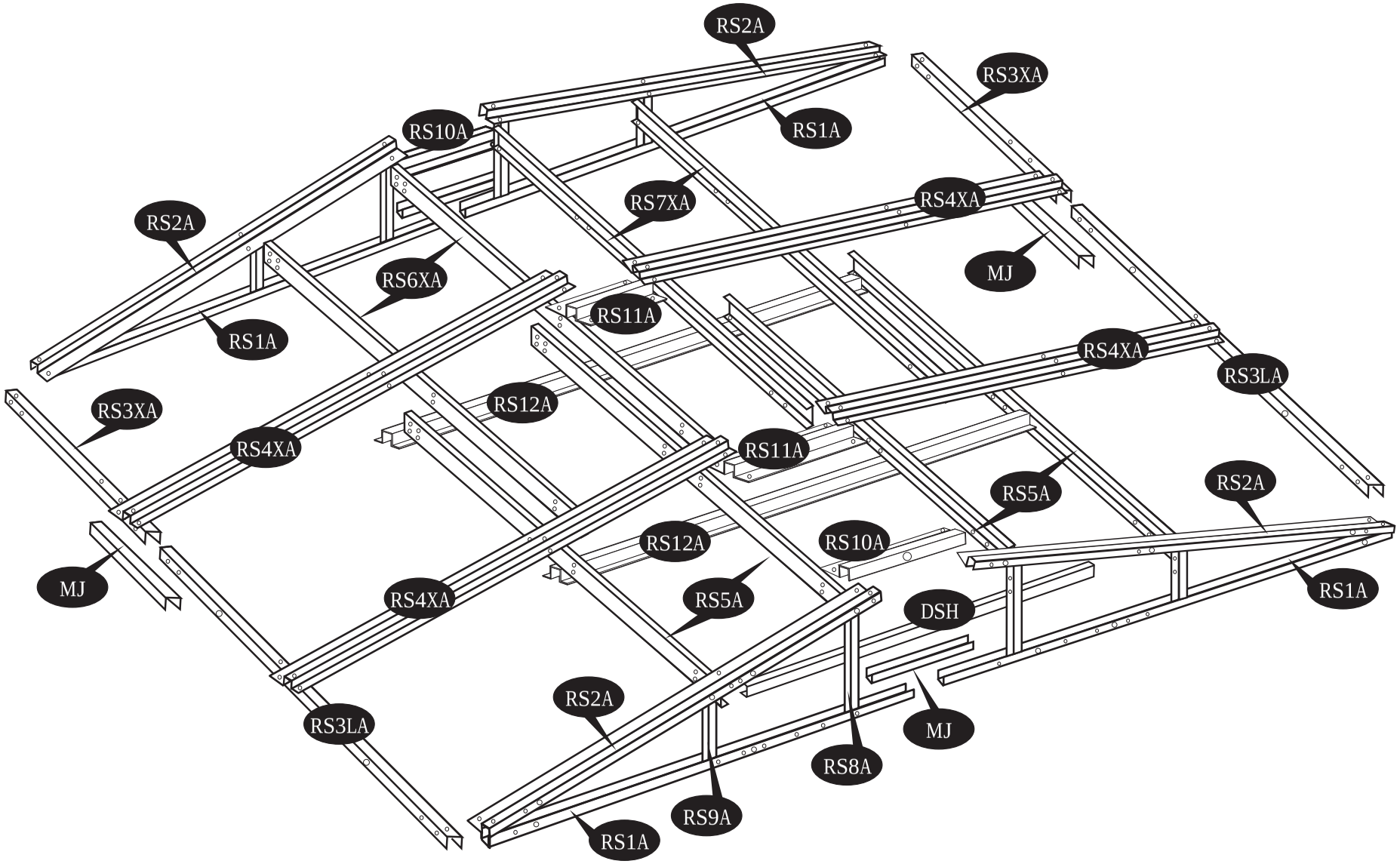

Roof Structure Exploded View with One Extension

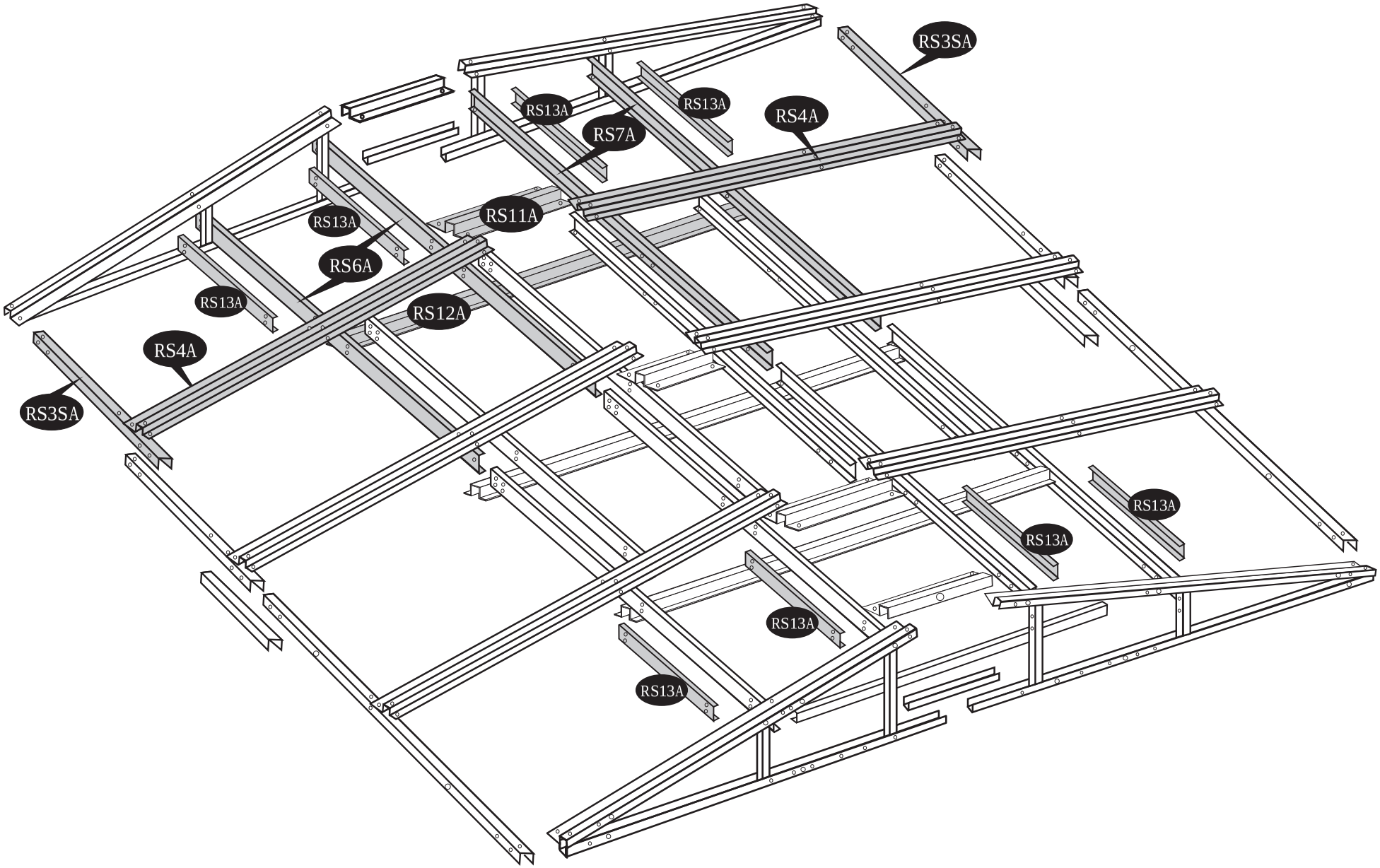

Front roof structure assembly

4. Assemble front roof structures (RS1A) 2 nos. and middle joining support (MJ) together with 4 (S1) screws.

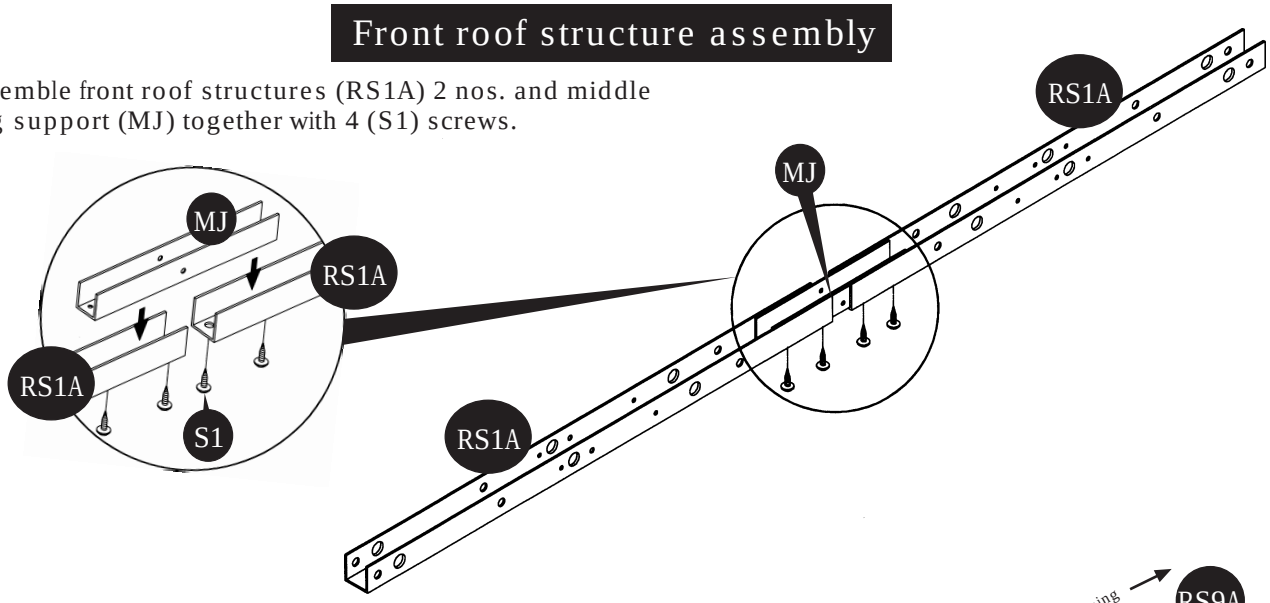

5. Assemble roof structure support (RS8A) and (RS9A) to (RS1A) assembly with only 6 (S1) screws as shown in fig.

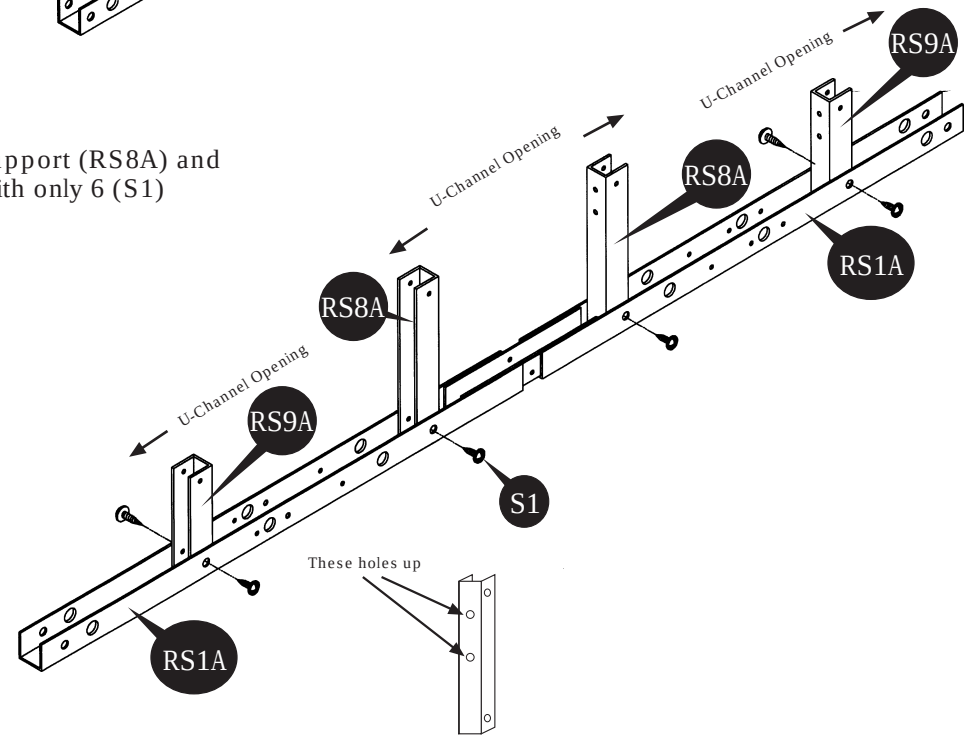

Step 1

6. Assemble roof structure (RS2A) to (RS8A) and (RS9A) with 8 (S1) screws.

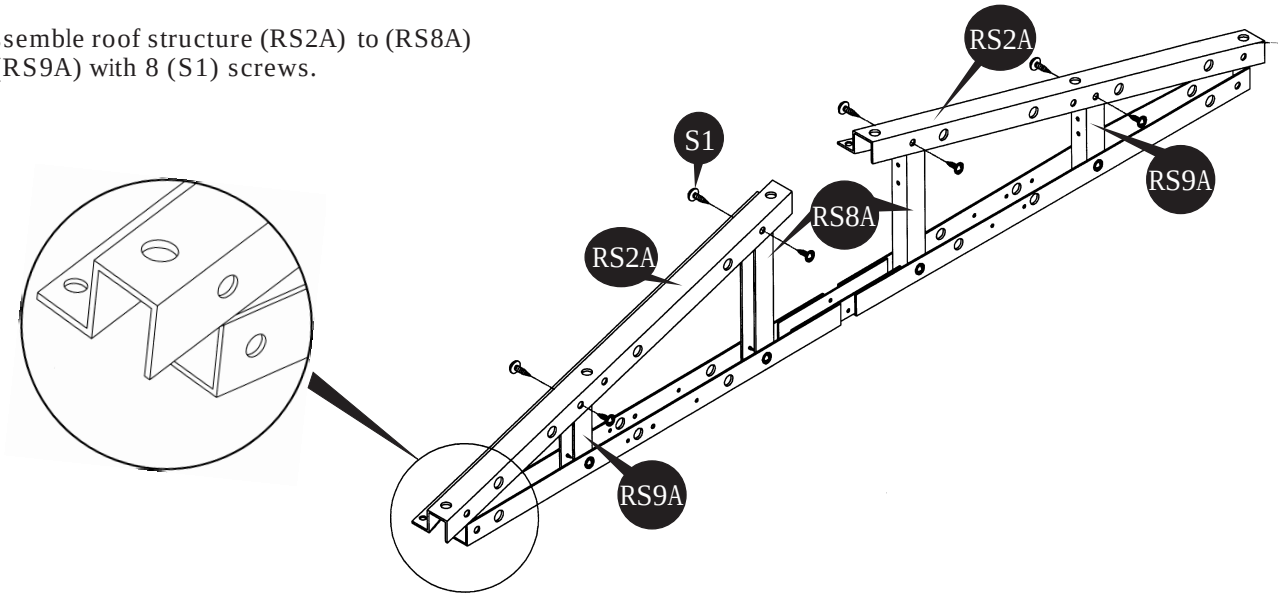

Back roof structure assembly

7. Assemble back roof structures (RS1A) 2 nos. and middle joining support (MJ) together with 4 (S1) screws.

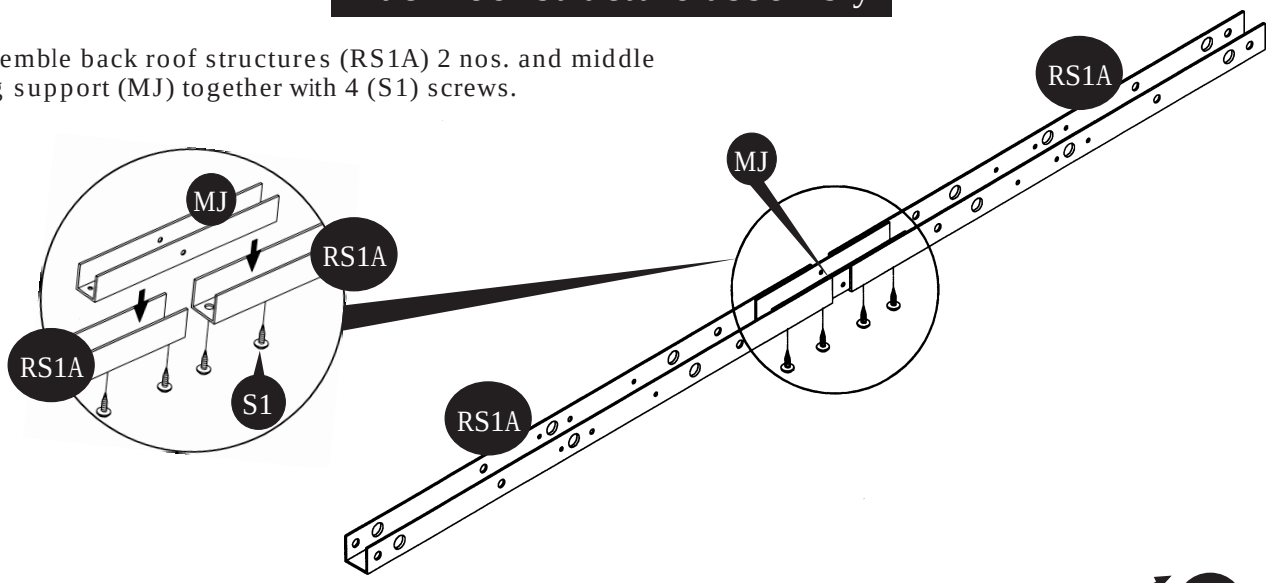

8. Assemble roof structure support (RS8A) and (RS9A) to (RS1A) assembly with 8 (S1) screws.

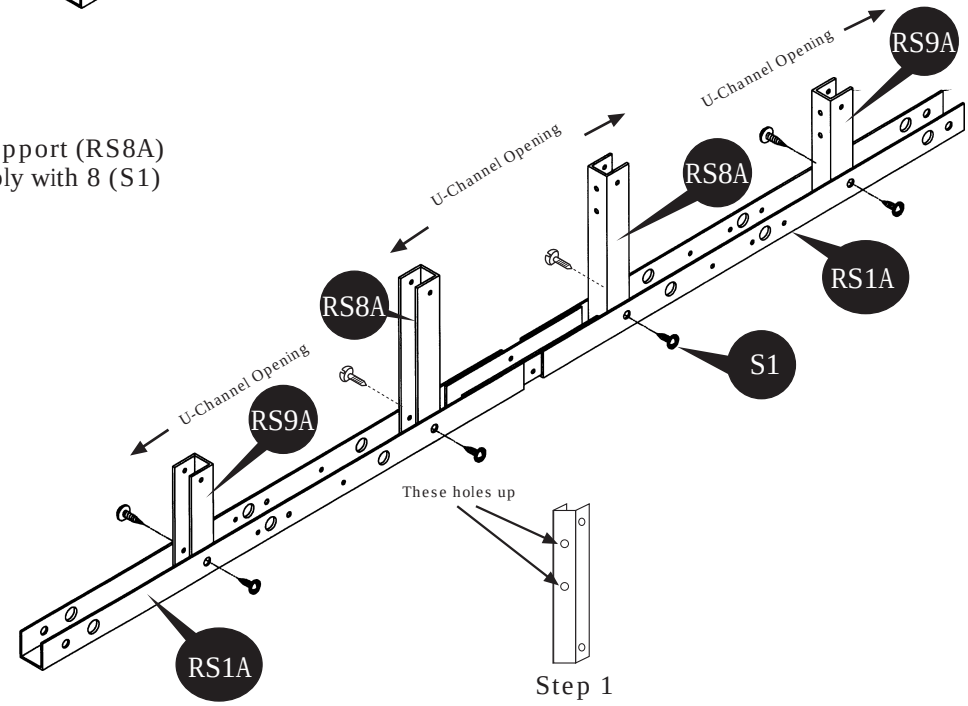

9. Assemble roof structure (RS2A) to (RS8A) and (RS9A) with 8 (S1) screws.

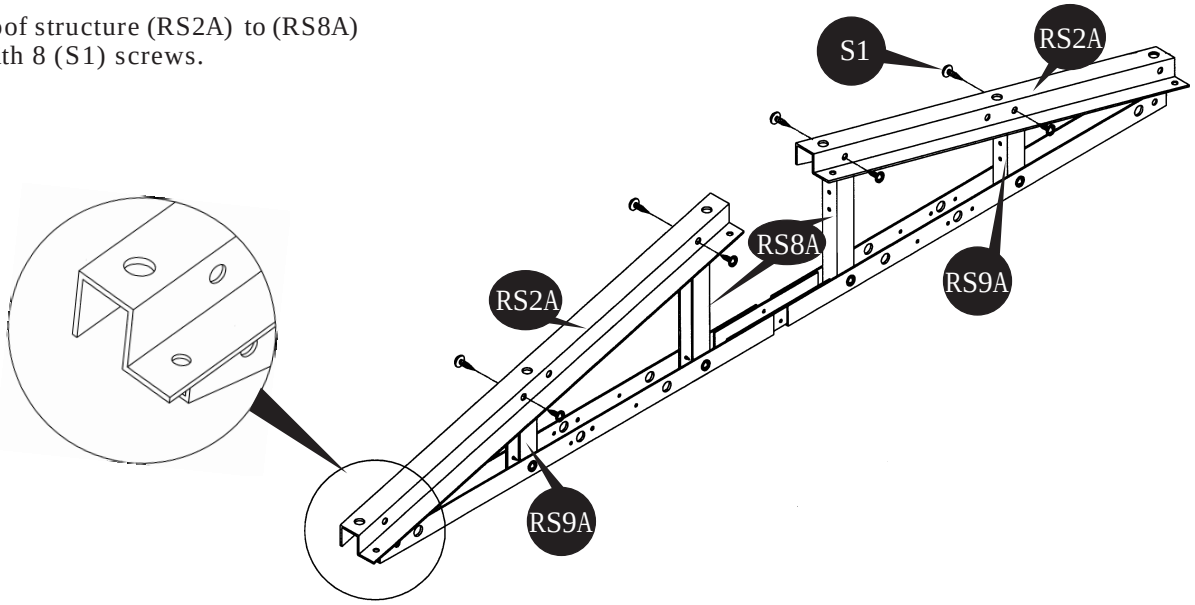

10. Assemble the roof structures (RS3LA), (RS3XA) with middle joining support (MJ). Use only 2 (S1) screws as shown in fig. 1.
Assemble (RS3XA) & extension roof structure (RS3SA) with 2 (S1) screws. See fig. 2 & 3.
Make 2 sets.
For each extension add one (RS3SA).

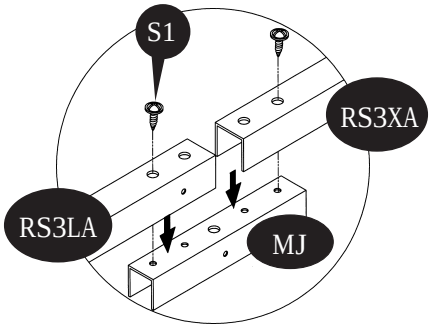

fig.1

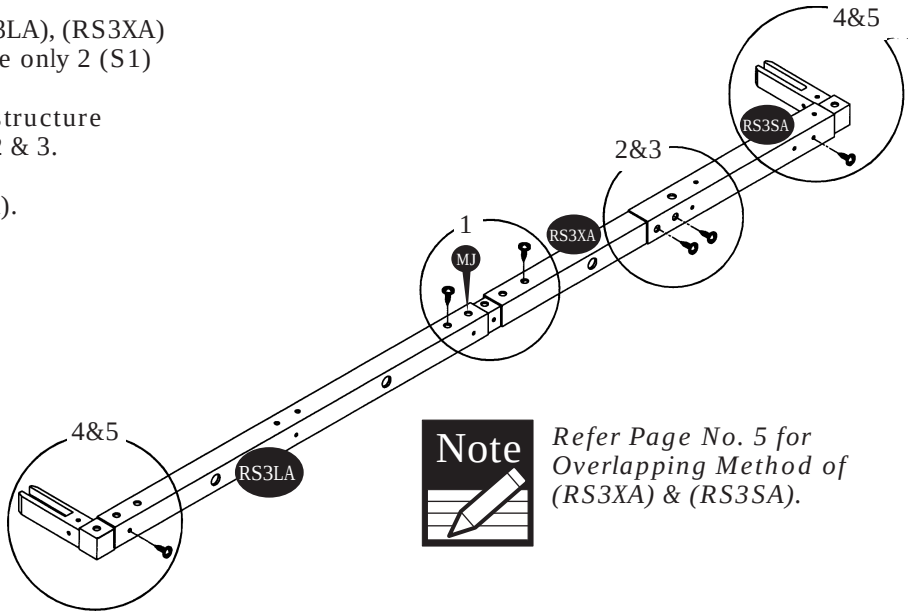

Note

Refer Page No. 5 for Overlapping Method of (RS3XA) & (RS3SA).

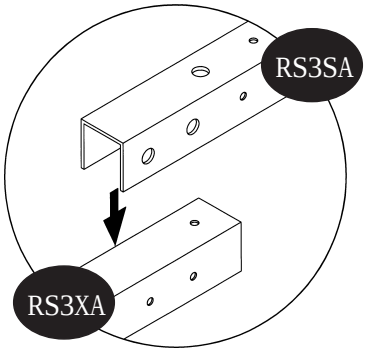

fig.2

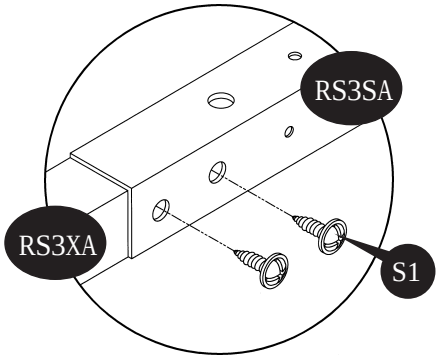

fig.3

10a. Insert 90 degree joint (RJ) into the roof structure (RS3LA). Use a hammer to push in. Use (S1) screws to fix. Repeat on other end of (RS3SA). See fig.4 & 5.

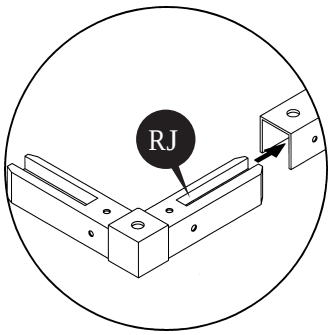

fig.4

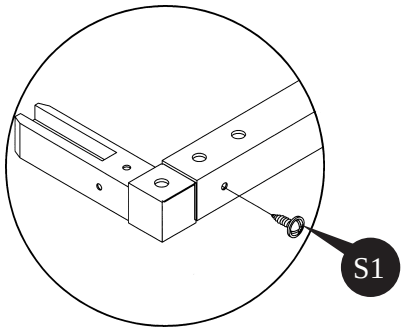

fig.5

11. Assemble the roof structure (RS6XA) into (RS5A) with 8 (S1) screws.
Make 2 sets.

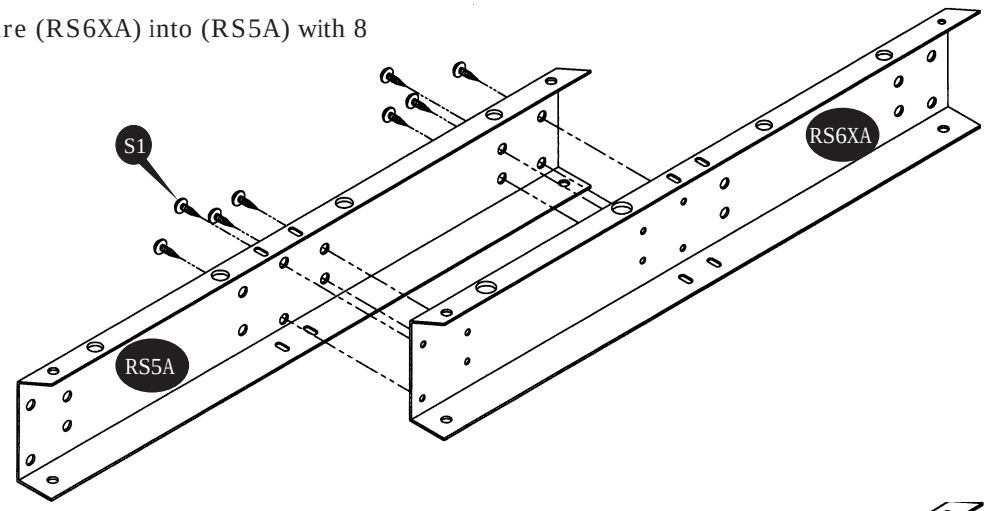

12. Assemble the roof structure (RS6XA) into (RS6A) with 6 (S3) screws with nut.
Make 2 sets.
Add one roof structure (RS6A) for each extension.

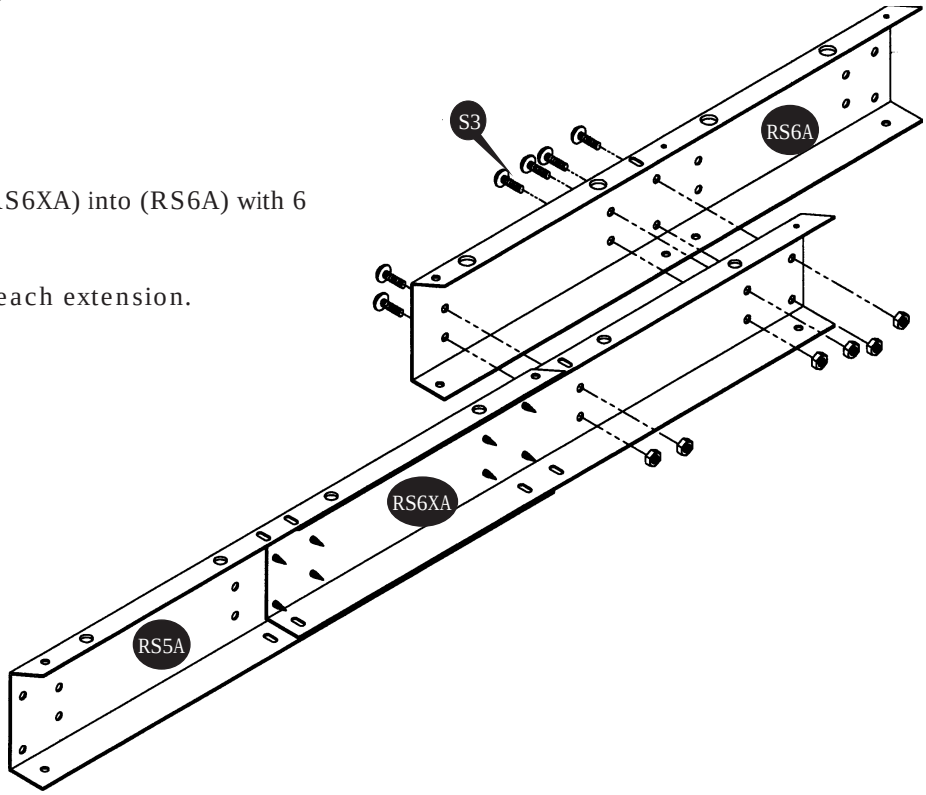

13. Assemble the roof structure into (RS5A) & (RS6A) into roof structure (RS13A) with 8 (S3) screws with nuts at both ends.
Make 2 sets.

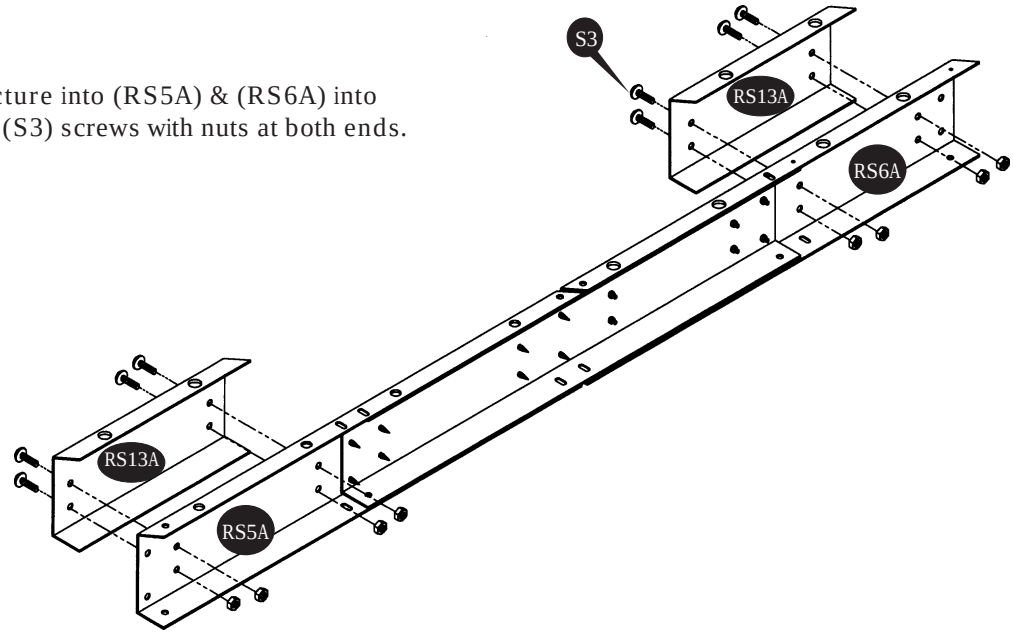

14. Assemble the roof structure (RS7XA) into (RS5A) with 8 (S1) screws.
Make 2 sets.

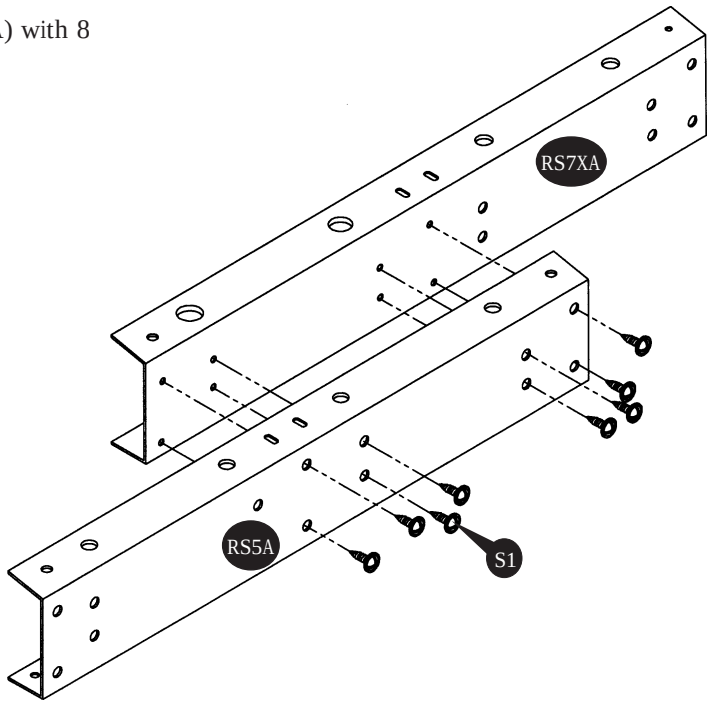

15. Assemble the roof structure (RS7XA) into (RS7A) with 6 (S3) screws with nut.
Make 2 sets.
Add one roof structure (RS7A) for each extension.

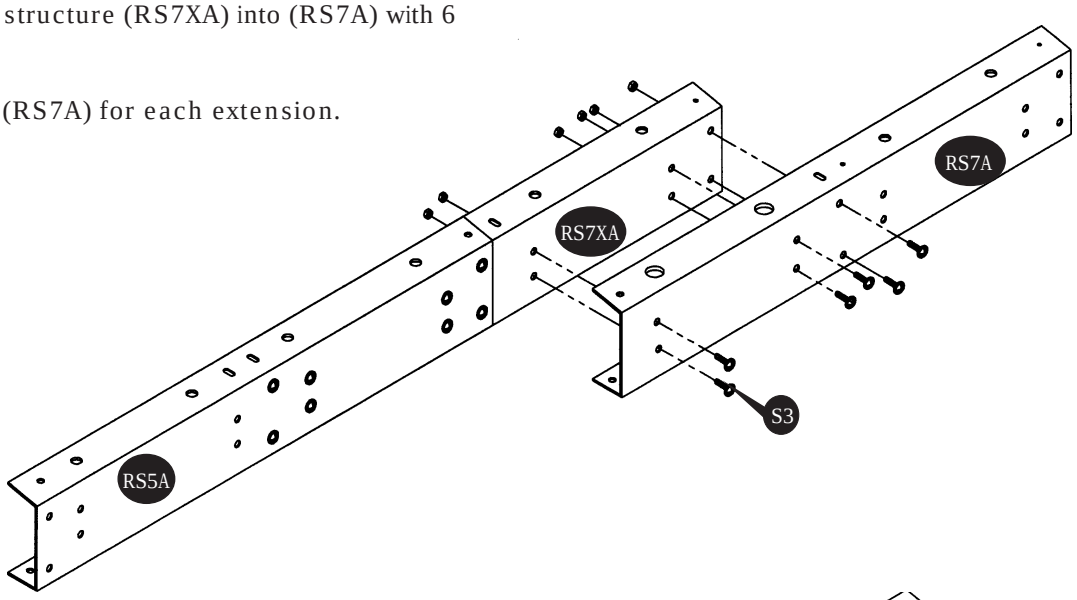

16. Assemble the roof structure (RS5A) & (RS7A) into roof structure (RS13A) with 8 (S3) screws with nuts at both ends.
Make 2 sets.

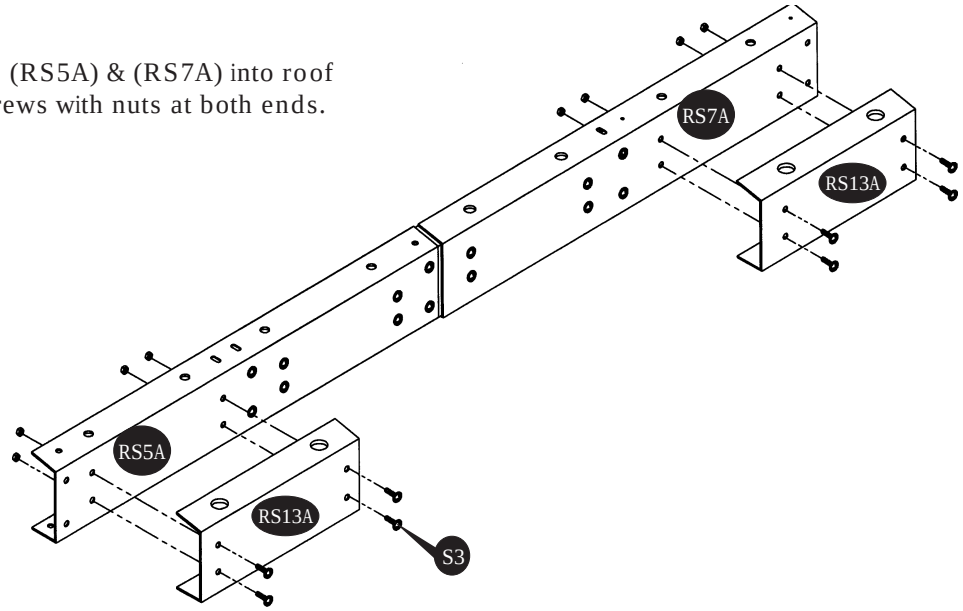

17. Place the assembled front roof structure into position on top of door columns. Line up pre-drilled holes with door column fittings (FDCL) & (FDCR). Use (S1) screws to fix front roof structure to the door columns with left and right door column fittings.

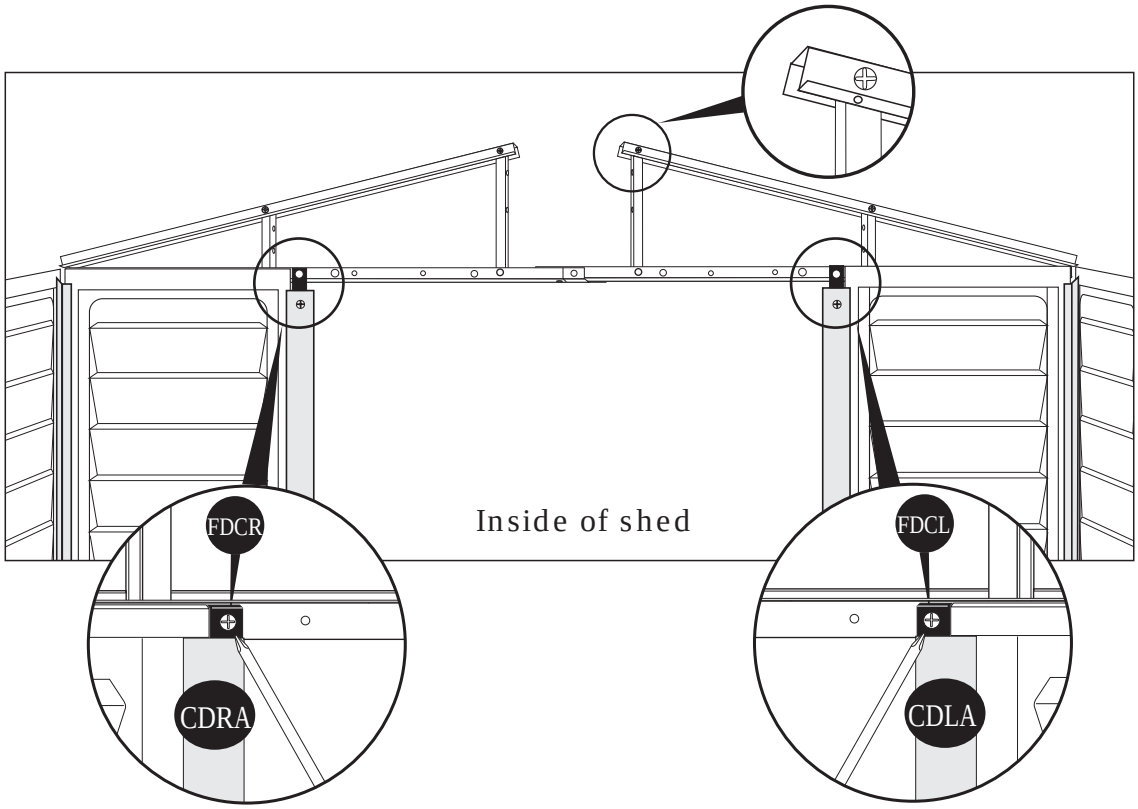

18. Fix the door stopper horizontal (DSH) to the front roof structure from inside with 6 (S1) screws. Position the latch hole to face down.

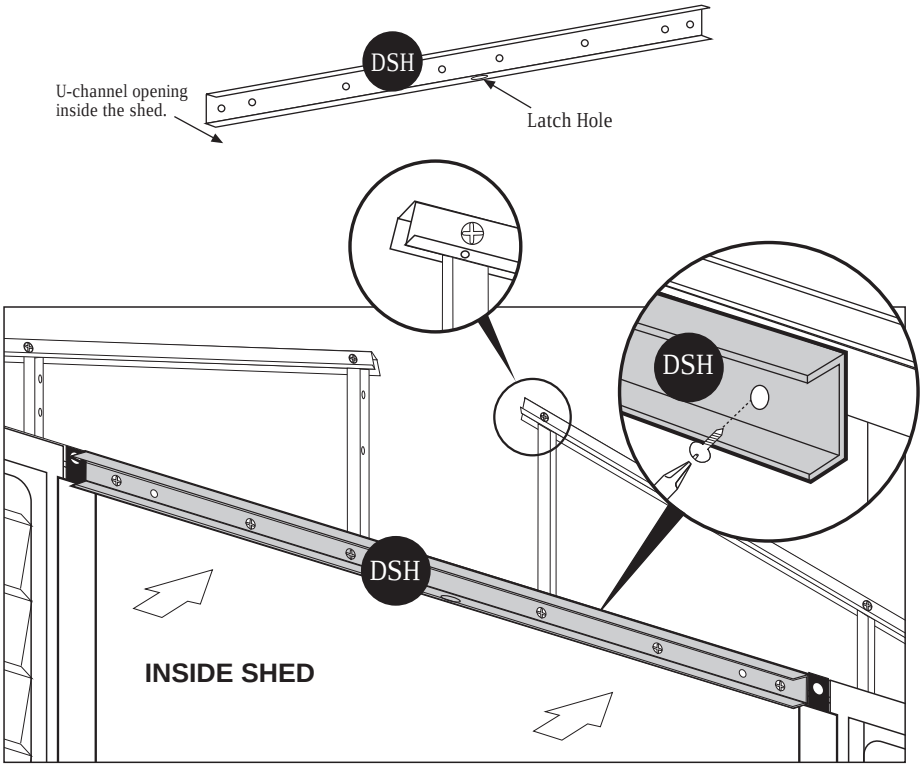

19. Place the assembled back roof structure into position on top of middle columns (CMA). Line up pre-drilled holes with middle column fittings (FMC). Use (S1) screws to fix back roof structure to (FMC).

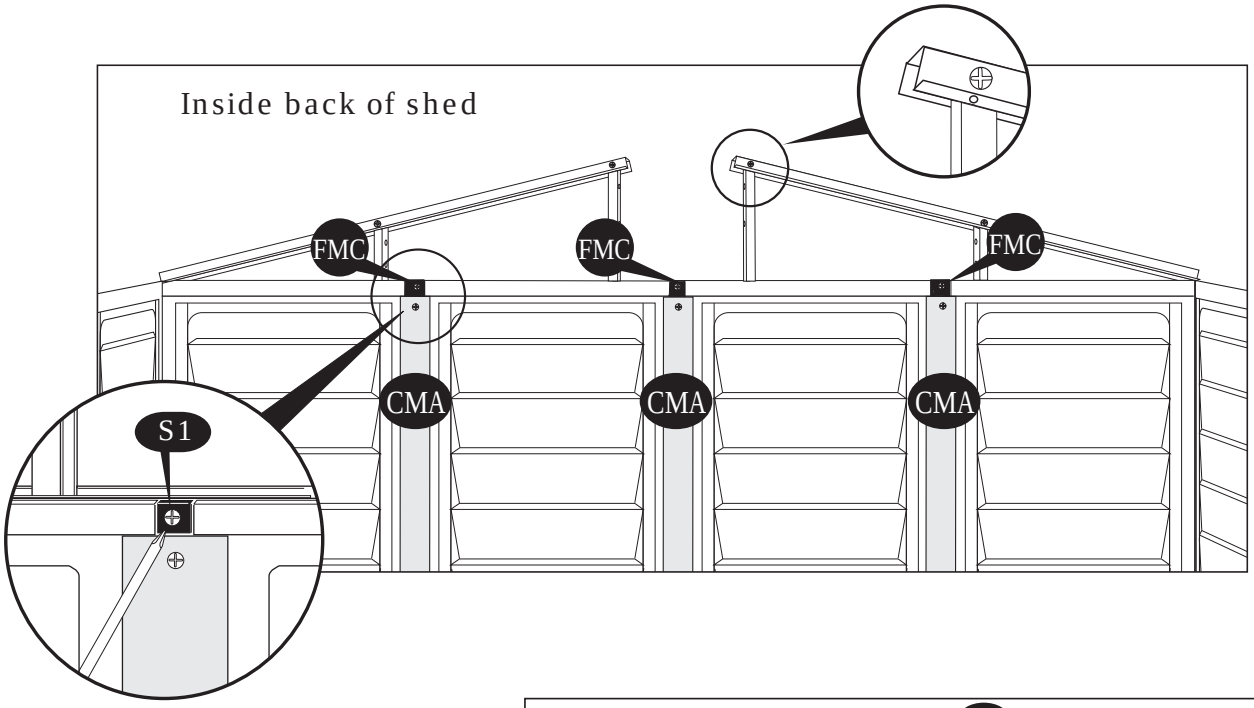

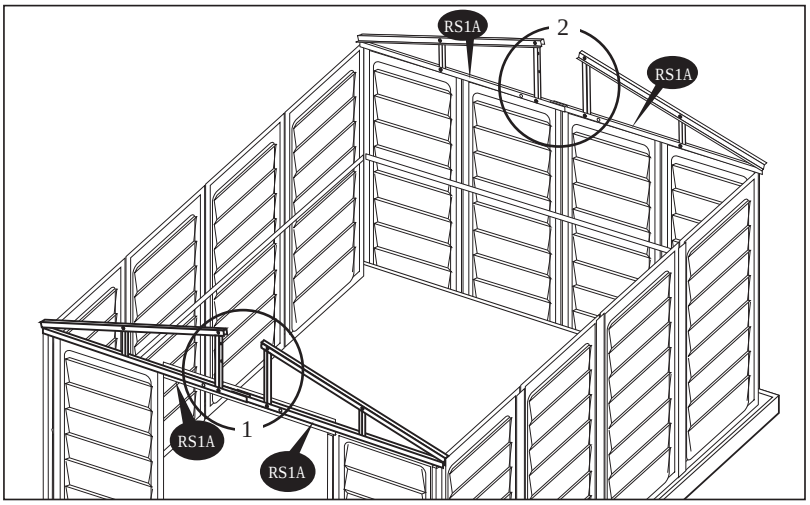

Note

Make sure the (RS2A) roof structure position towards inside the shed as shown in Fig.1 & 2.

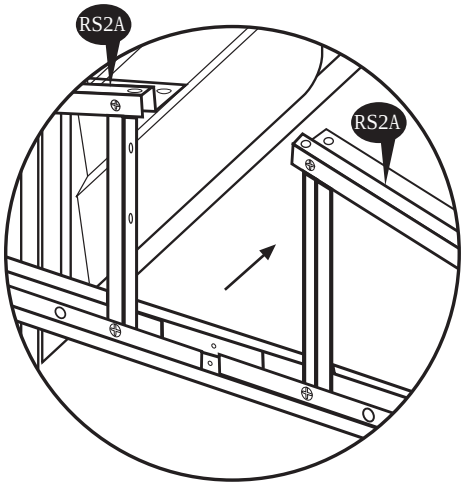

Fig.1

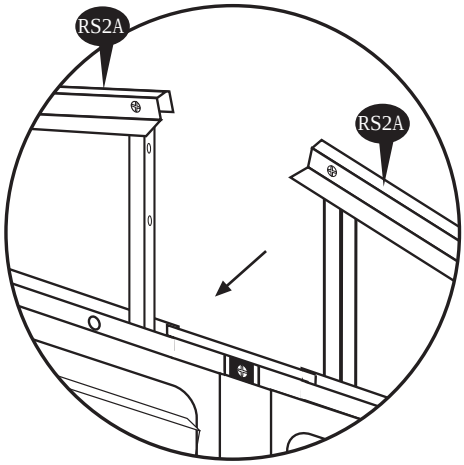

Fig.2

20. Insert the 90 degree joint (RJ) (assembled with RS3LA, RS3XA & RS3SA) into (RS1A) see fig. 1 Follow fig. 2 & 3.

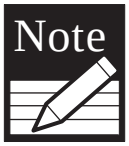

After assembly make sure this roof structure's U-Channel is positioned down.

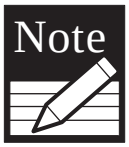

Notice the U-channel up position on roof structures (RS1A).

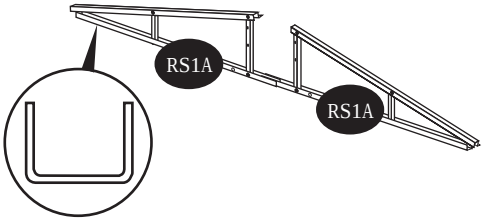

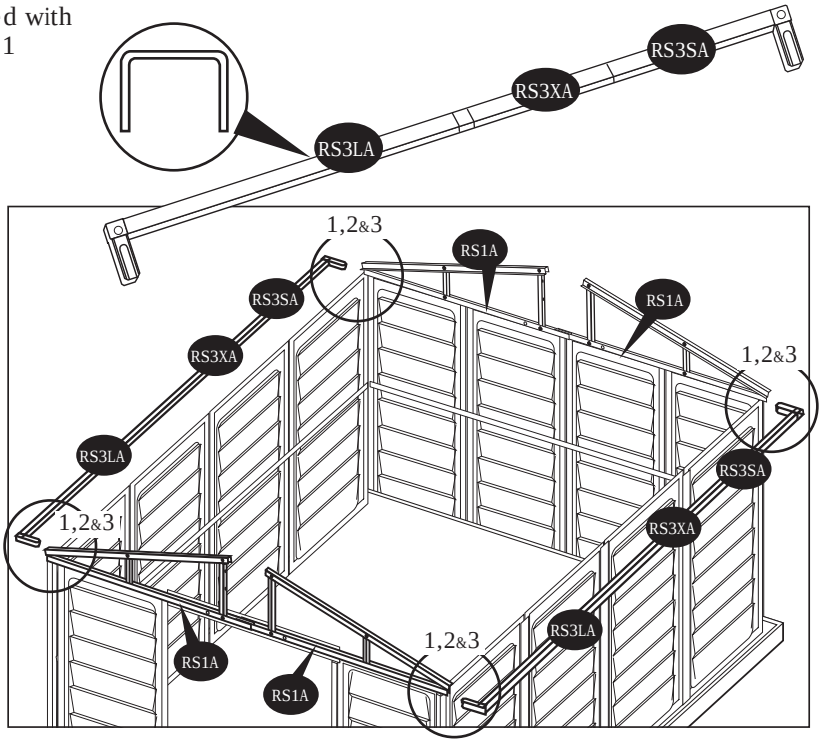

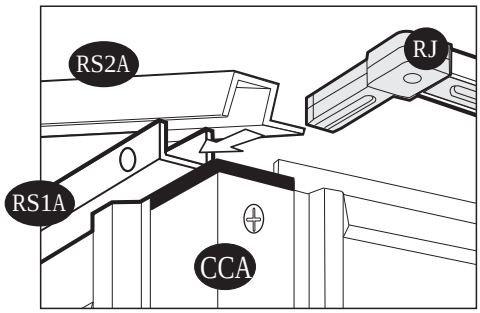

fig.1

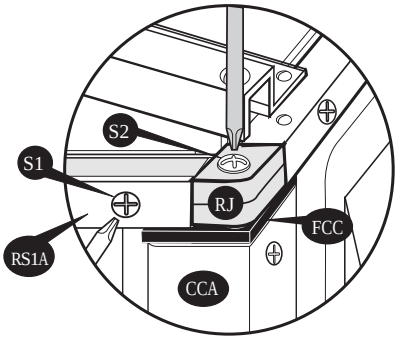

fig.2

Secure (RJ) 90 degree joint to (RS1A) with (S1) screws on top of the four corner columns (CCA).
Secure (RJ) with (FCC) using (S2) screw on all the four corner columns.

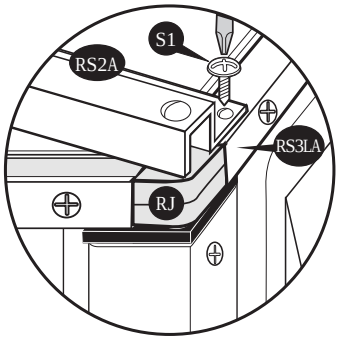

fig.3

Fix (RS2A) to 90 degree joint (RJ) through (RS3LA) & (RS3SA) with (S1) screw.

21. Fix (RS3) assembly to middle column fitting (FMC) with (S1) screws.

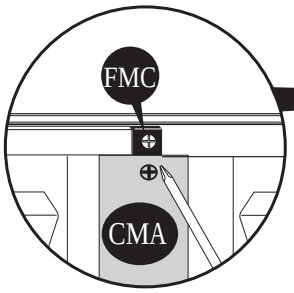

fig.1 to 6

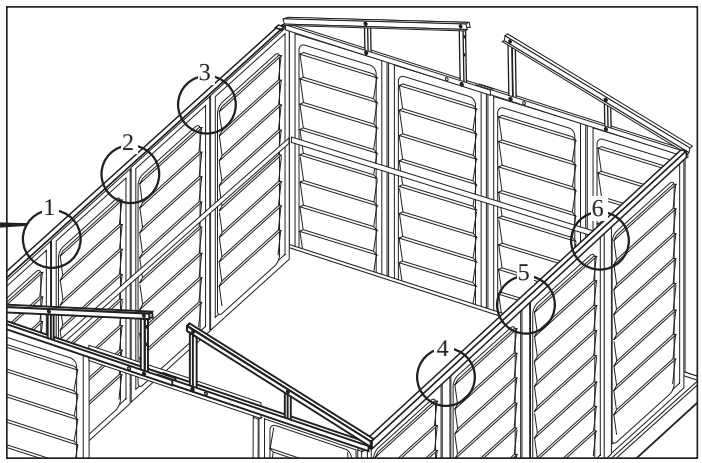

22. Place the assembled roof structure (RS5A) & (RS6A) into position on roof structure supports (RS8A) at the left side of the shed. Use (S1) screws to fix. See fig.1 & 2.

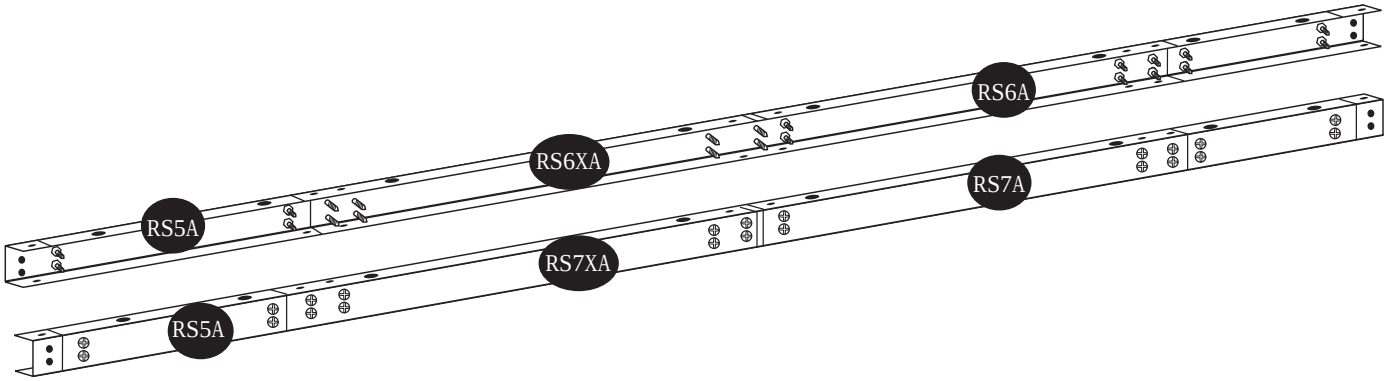

23. Place the assembled roof structure (RS5A) & (RS7A) into position on roof structure supports (RS8A) at the right side of the shed. Use (S1) screws to fix. See fig.1 & 2.

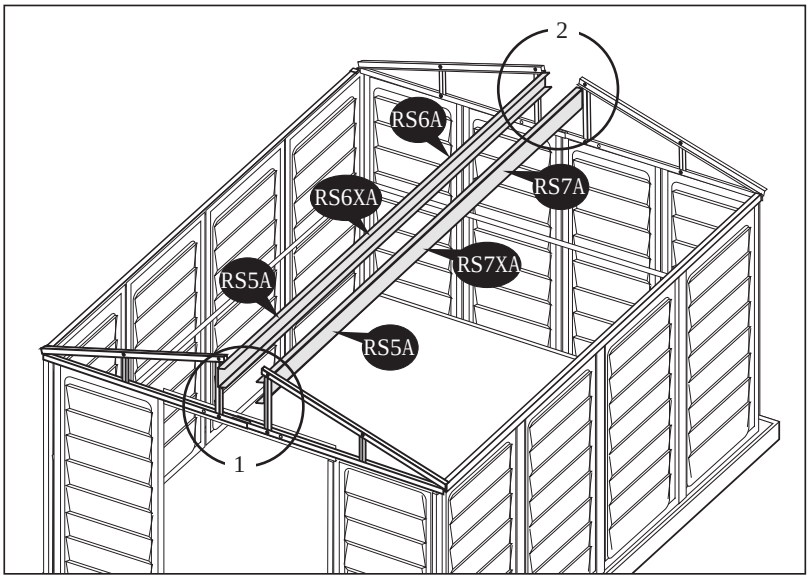

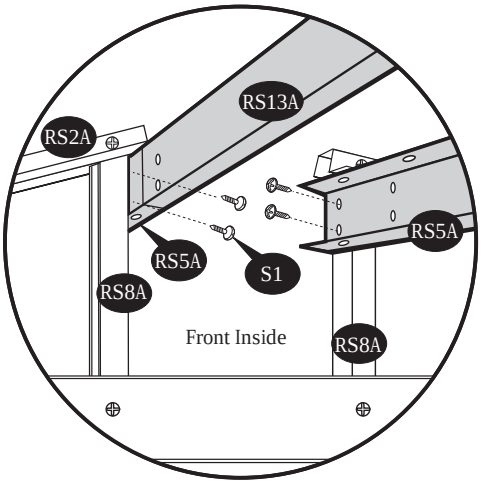

fig.1

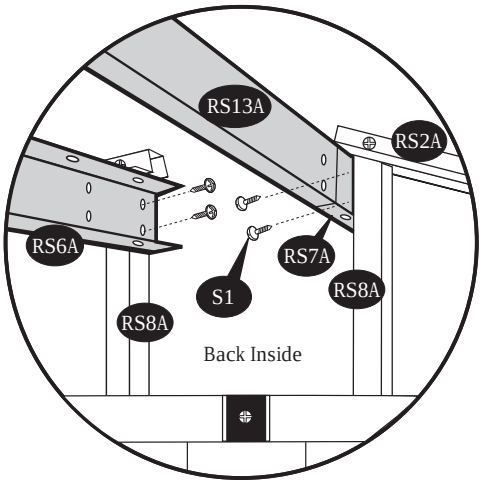

fig.2

24. Place the assembled roof structure (RS5A) & (RS6A) into position on roof structure supports (RS9A) at the left side of the shed. Use (S1) screws to fix. See Fig.1 & 2.

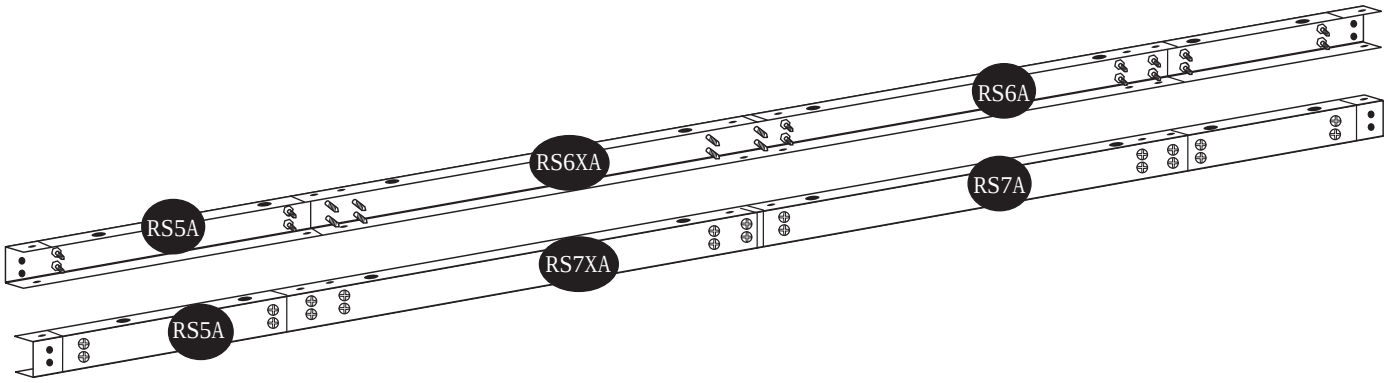

25. Place the assembled roof structure (RS5A) & (RS7A) into position on roof structure supports (RS9A) at the right side of the shed. Use (S1) screws to fix. See Fig.1 & 2.

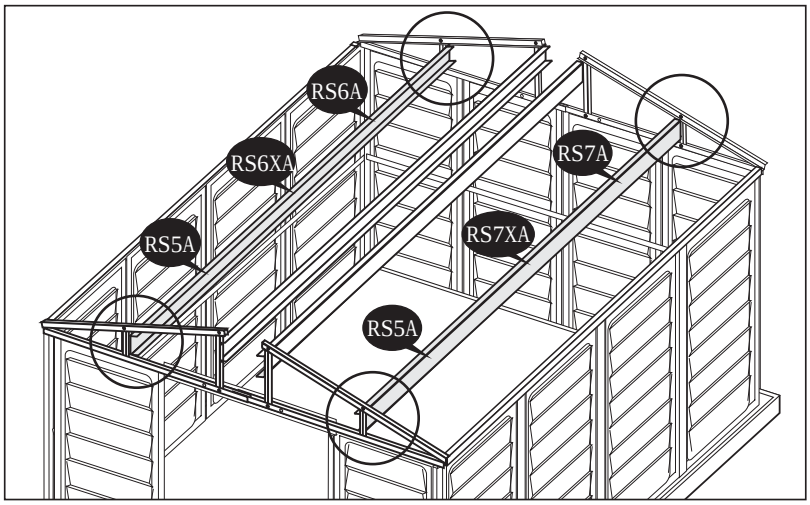

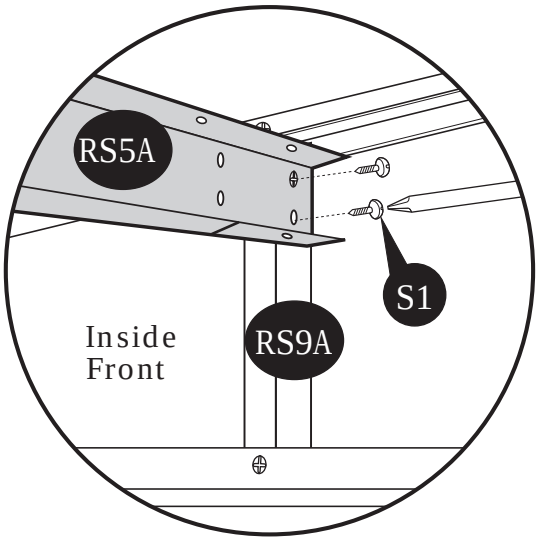

fig.1

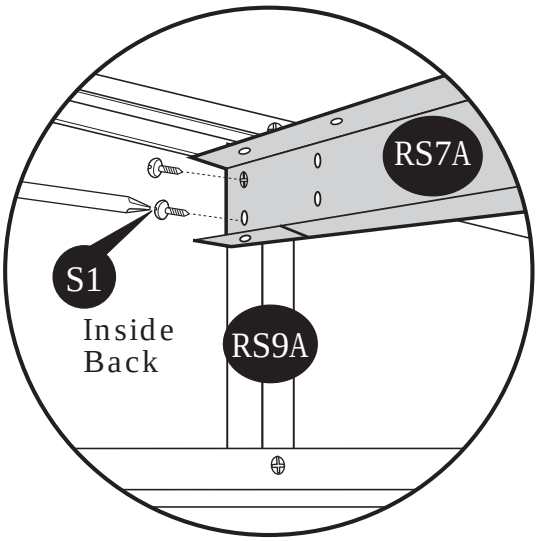

fig.2

26. Attach the roof structures (RS4XA) 4 nos. to (RS3LA) and (RS3XA) with (S1) screws. See fig. 1 and 2.

26a. Attach the roof structures (RS4XA) 4 nos. to (RS5A), (RS6A) assembly and (RS5A), (RS7A) assembly with (S7) screws. See fig. 3 and 4.

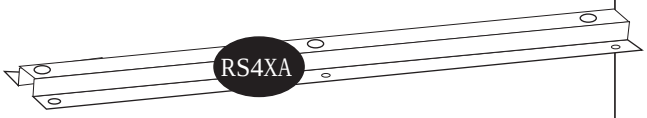

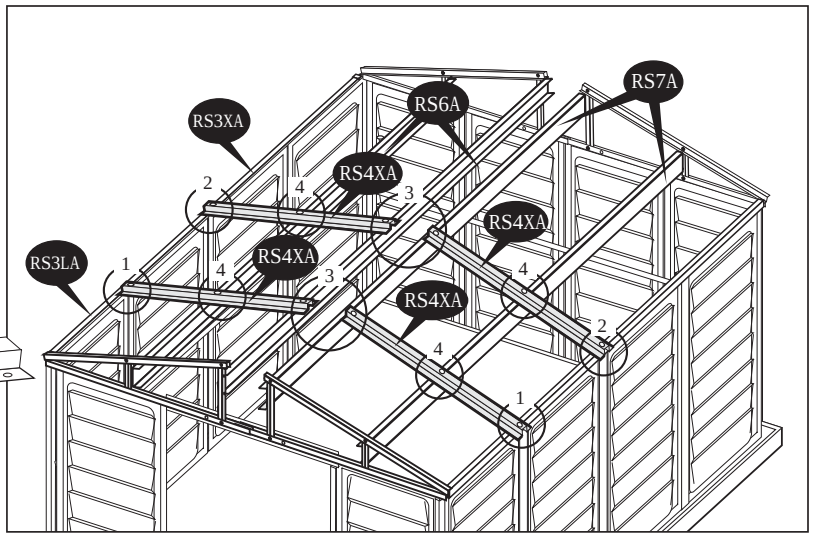

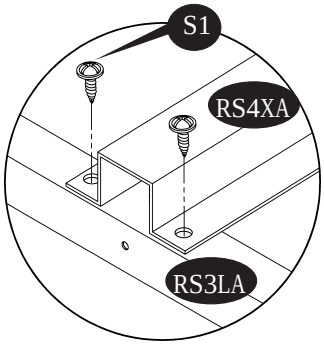

fig.1

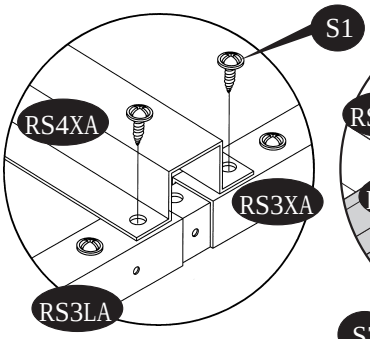

fig.2

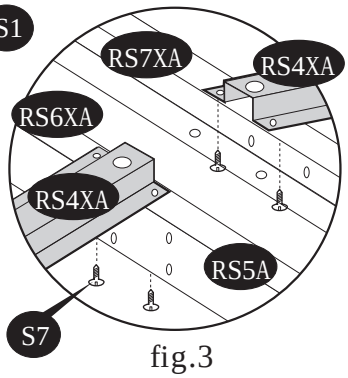

fig.3

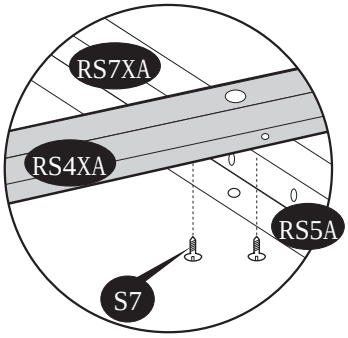

fig.4

27. Attach the roof structures (RS4A) one end to roof structure (RS3SA) with (S1) screws. see fig. 1& 2. Fix the other end to roof structure (RS6A) & (RS7A) with (S1) screws see fig. 3. Fix the middle portion to (RS6A) & (RS7A) roof structure with (S1) screws. See fig. 4.
For each extension add two (RS4A) roof structure.

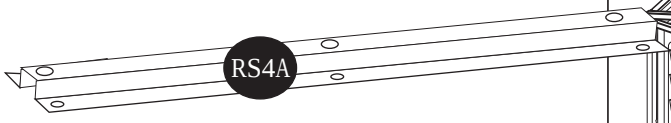

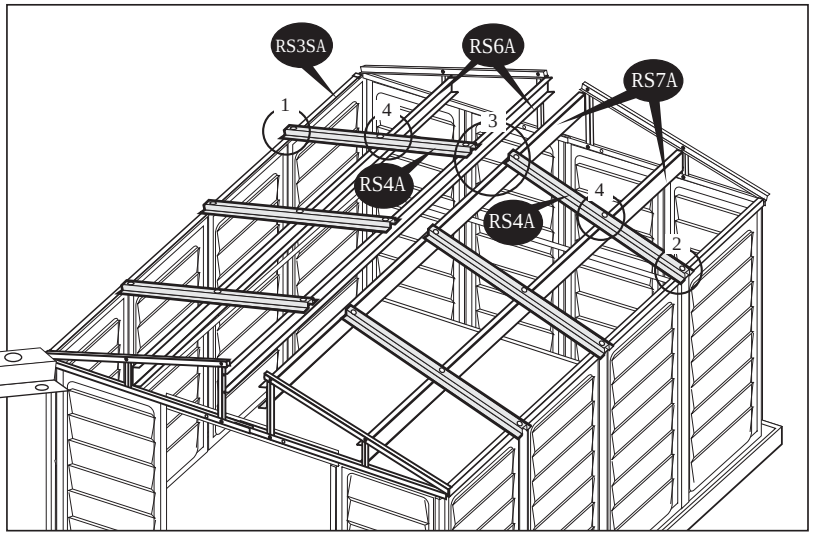

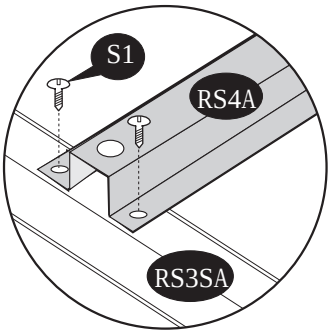

fig.1

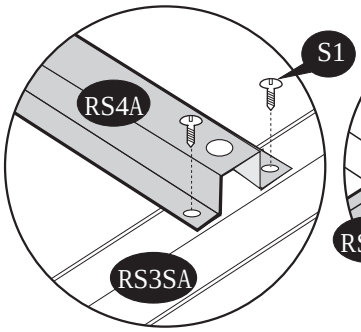

fig.2

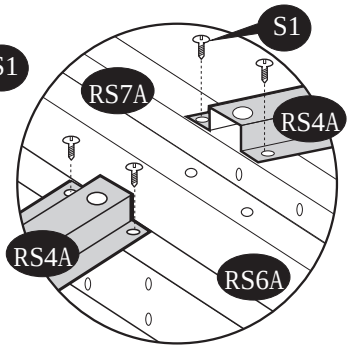

fig.3

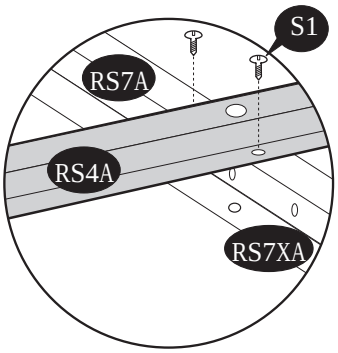

fig.4

28. Attach roof structure supports (RS10A) and (RS11A) to roof structures (RS5A), (RS6A) & (RS7A) using (S1) screws. For each extension add one (RS11A). See (fig.1), (fig.2) and (fig.3).

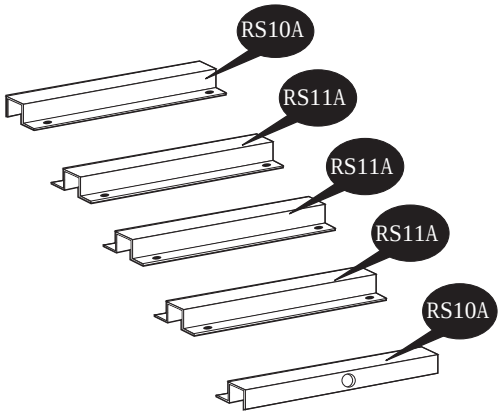

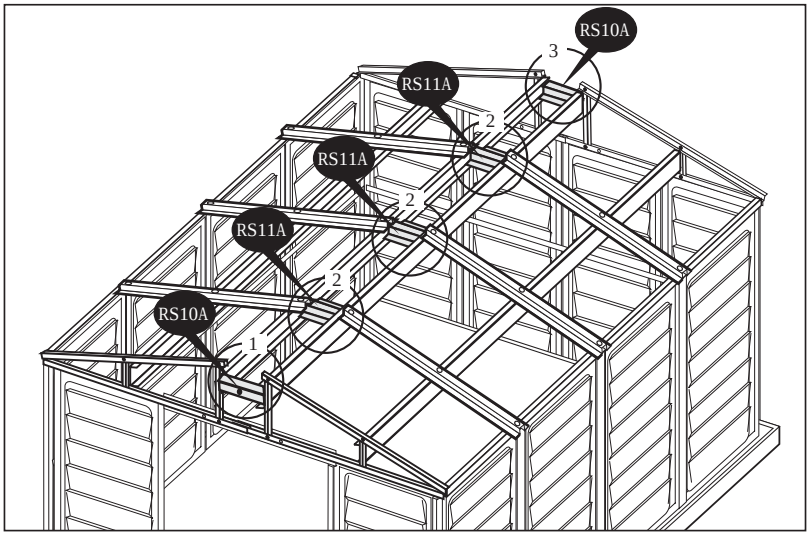

Note

Make sure hole in (RS10A) face outward on both sides.

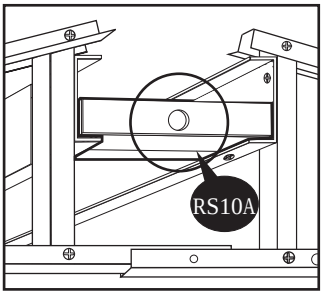

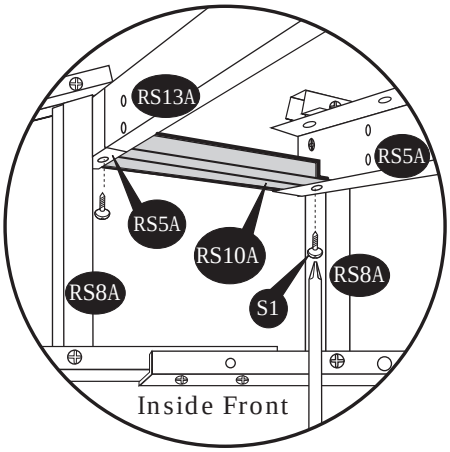

fig.1

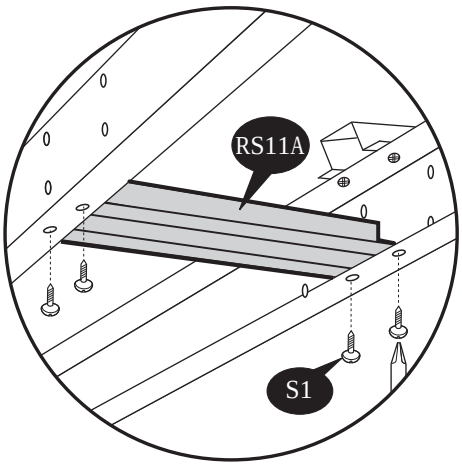

fig.2

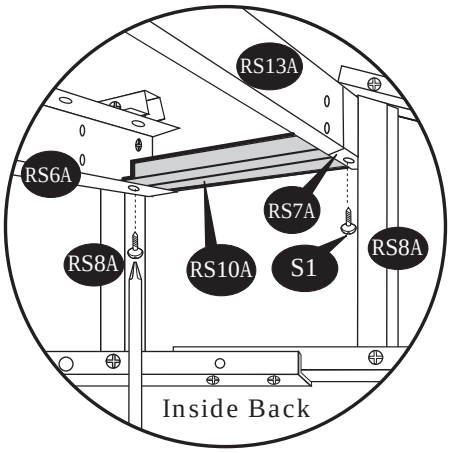

fig.3

29. Attach the roof structure support (RS12A) with (RS5A) to (RS5A) and (RS6A) to (RS7A) with (S1) screws. See (fig.1) and (fig.2)
Add one roof structure (RS12A) for each extension.

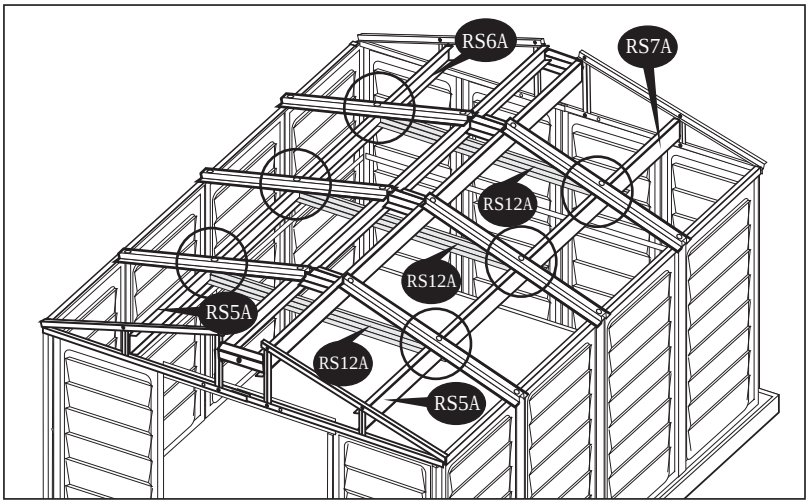

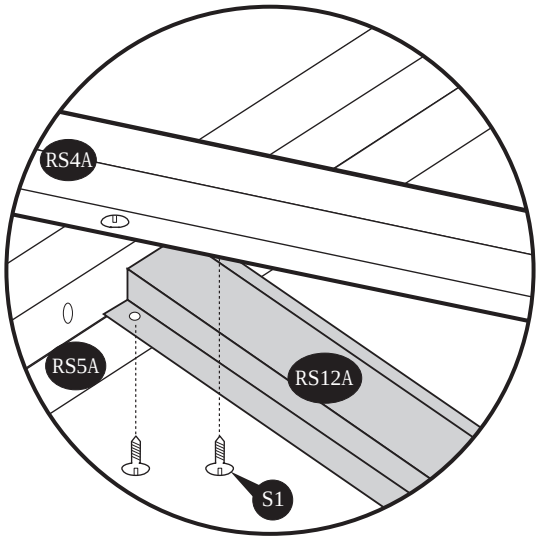

fig.1

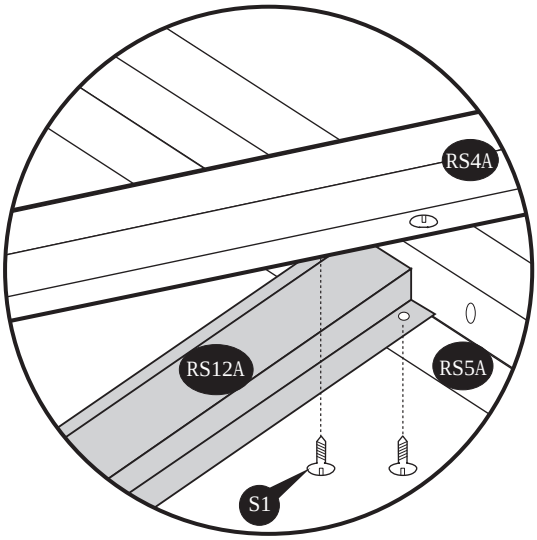

fig.2

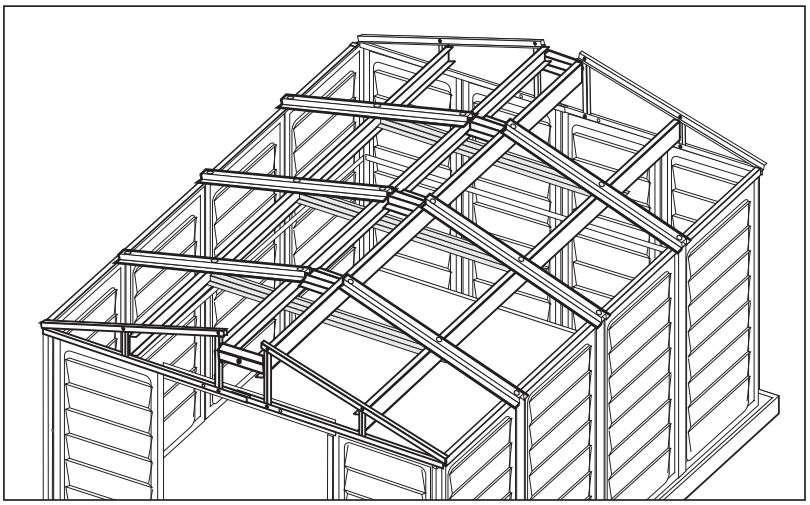

D. Roof panels

Parts Needed:

(6) Roof Panels	(RP↑)
(2) Facia Panel Left	(FPL)
(2) Facia Panel Right	(FPR)
(3) Ridge Cover Small	(RRS)
(80) Roof Plug w/Washer	(PPG)
(80) Roof Pin	(PIN)
(12) Sagging Support	(RS14A)

Parts Needed for each extension:

(2) Roof Panels	(RP↑)
(1) Ridge Cover Small	(RRS)
(16) Roof Plug w/Washer	(PPG)
(16) Roof Pin	(PIN)
(4) Sagging Support	(RS14A)

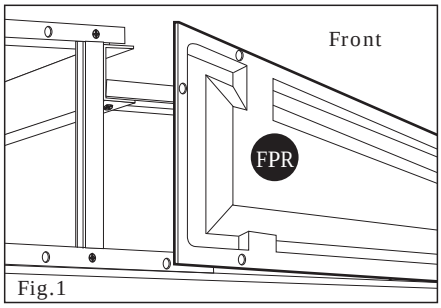

Fig.1

1. Place facia panel (FPR) to front roof structure right side.

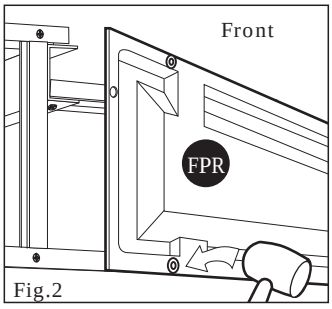

Fig.2

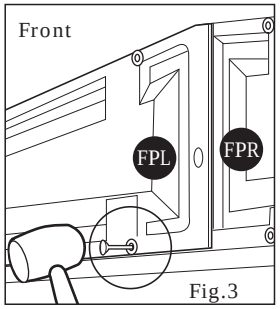

Fig.3

2. Line up the holes with roof structure and fix the roof plugs w/washers. Use a hammer (rubber mallet) to drive in roof pin. See fig. 1, 2 & 3 for details. Place facia panel left (FPL) to the front roof structure left side. Make sure (FPL) overlaps on (FPR). Repeat action to fix facia panels on backside. See Fig. 4, 5 & 6.

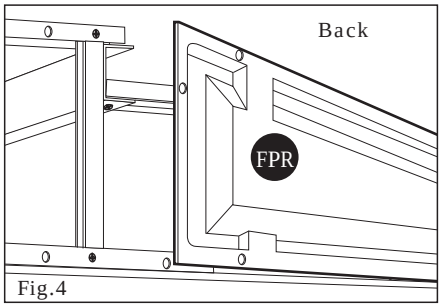

Fig.4

TIP First insert all roof plugs with washers to the panels (left & right) then drive in the roof pins.

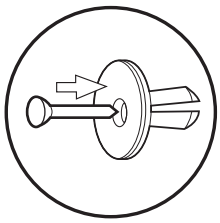

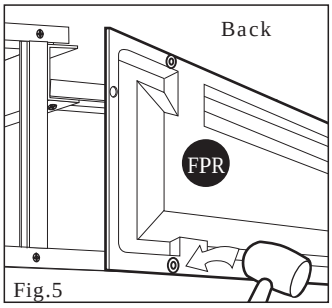

Fig.5

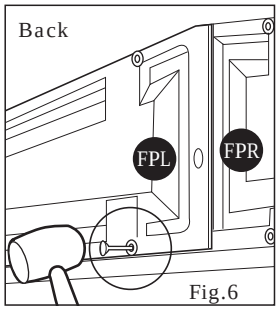

Fig.6

3. Start attaching the roof panels from (FPL) corner side by sliding the roof panel (RP↑) to roof structure. Locate the hole positions of the roof panel and roof structure. Fix roof plugs with washers. Use a hammer to drive in roof pins. See figures 1 thru 8.
Add two roof panels for each extension.

4. Attaching the ridge cover (RRS) on top of the roof panels (RP↑) start from the front side of the shed. See Figures 9 thru 12.
Add one ridge cover for each extension.

Note Do not insert Plugs at this point.

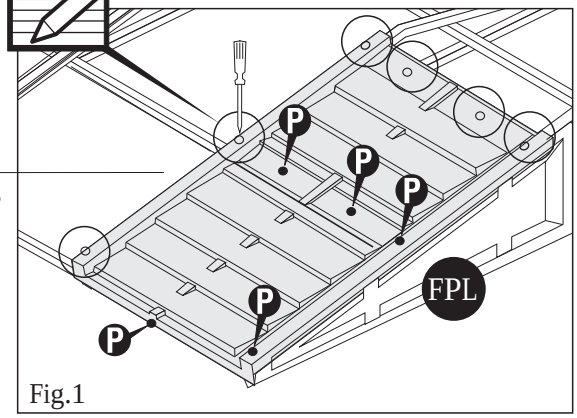

Fig.1

KEY
P Roof Plugs

Note Use a screw driver to align the holes.

Insert roof plugs into roof panels only as indicated.

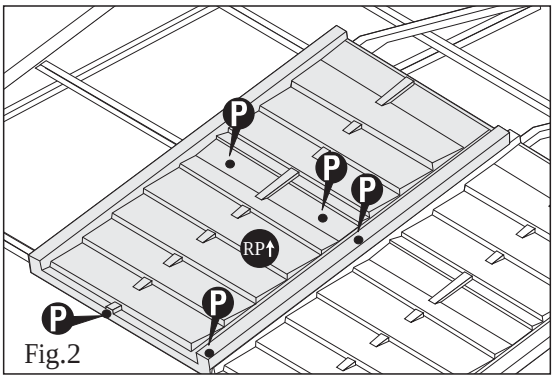

Fig.2

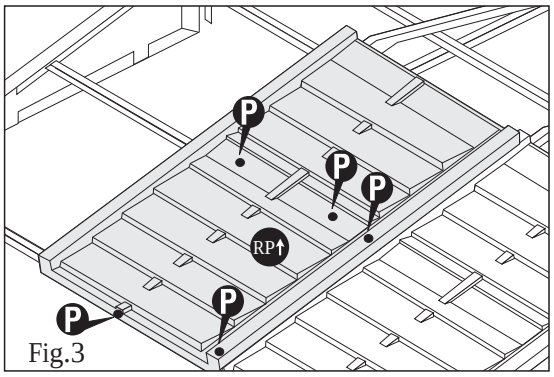

Fig.3

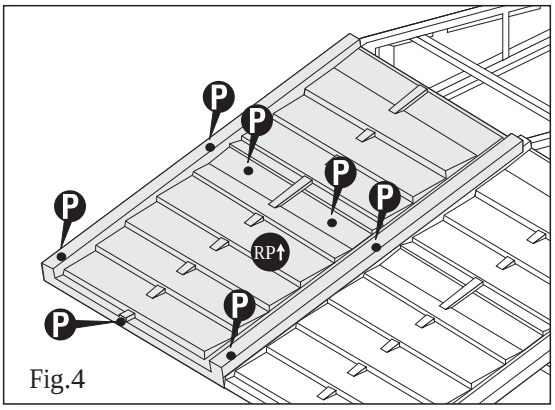

Fig.4

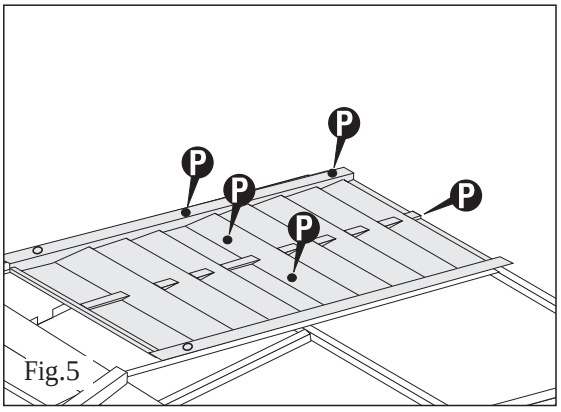

Fig.5

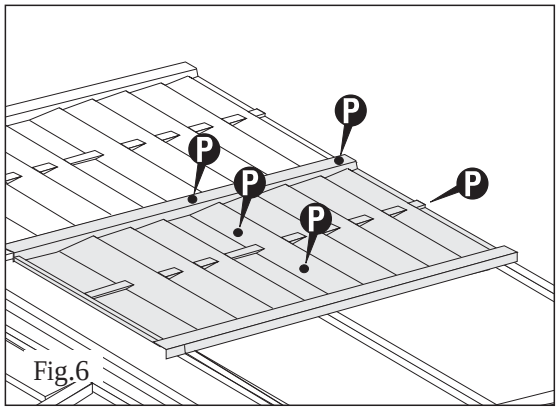

Fig.6

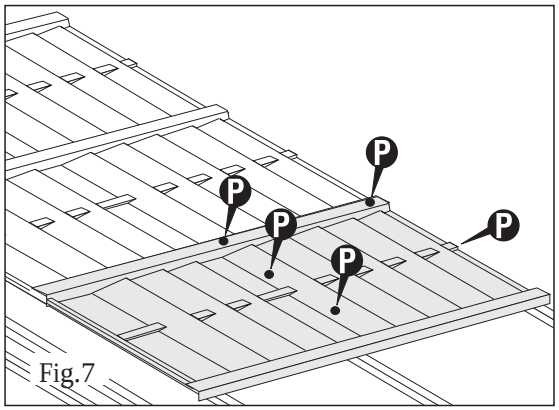

Fig.7

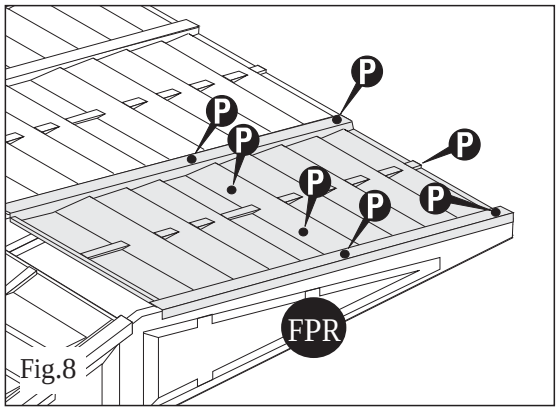

Fig.8

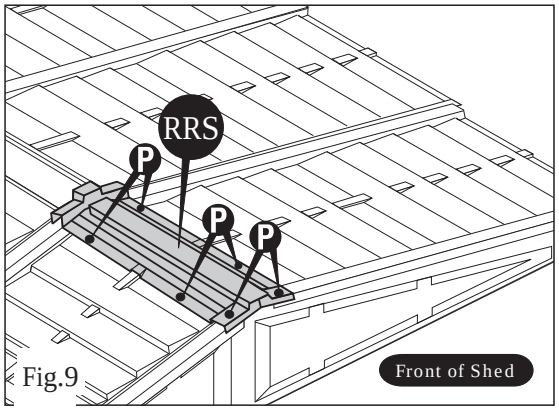

Fig.9

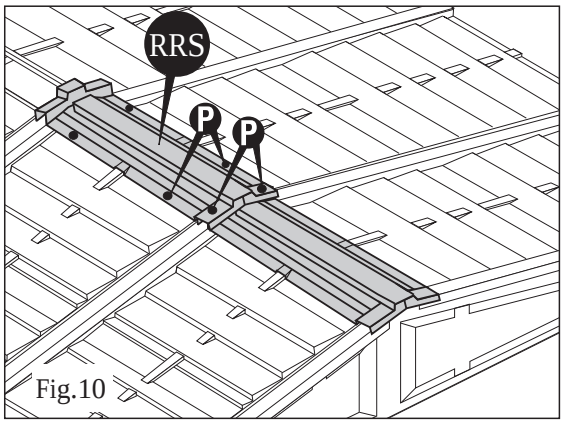

Fig.10

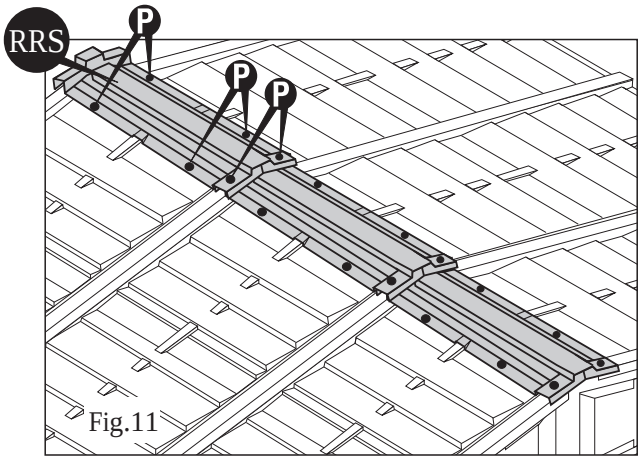

Fig.11

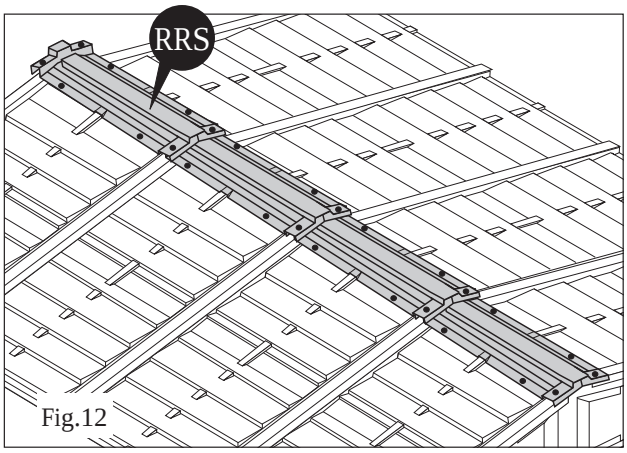

Fig.12

5. Insert the sagging support (RS14A) from inside the shed by sliding in between roof structure (RS5) and roof panel until it reaches (RS3) roof structure for each panel. See fig.1.

6. Insert the sagging support (RS14A) from inside the shed by sliding in between roof structure (RS5) and roof panel until it touches the other roof structure (RS5). See fig.2.

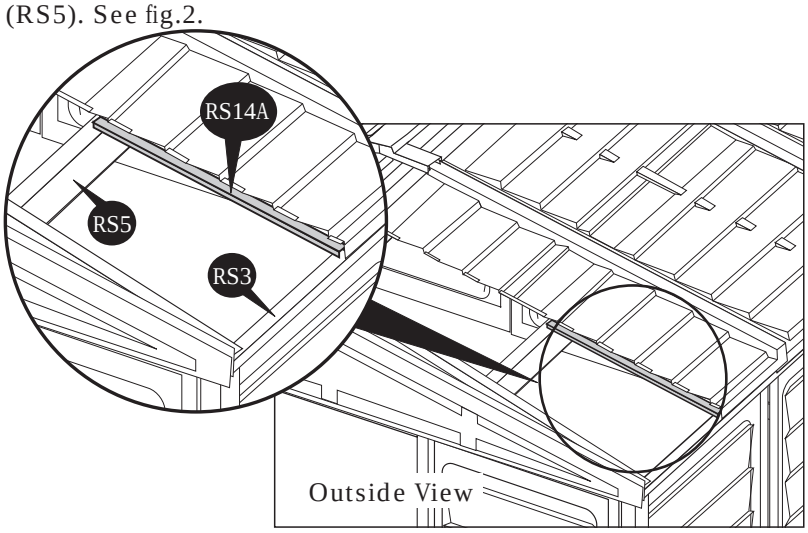

Fig. 1

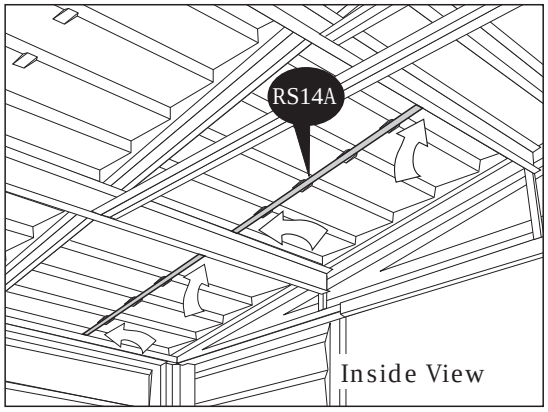

Fig. 2

E. Doors

Parts Needed:

(1) Door Left
(1) Door Right

1. Attach the doors left and right (see fig.1) with Loose pin hinges on door columns (CDLA) and (CDRA).

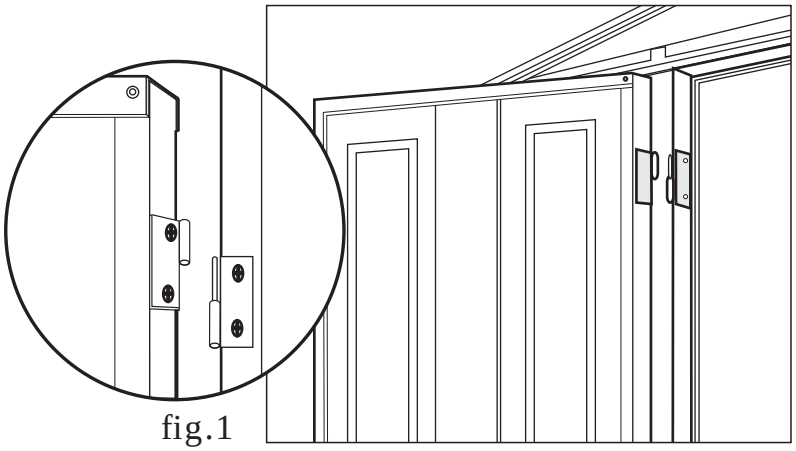

fig.1

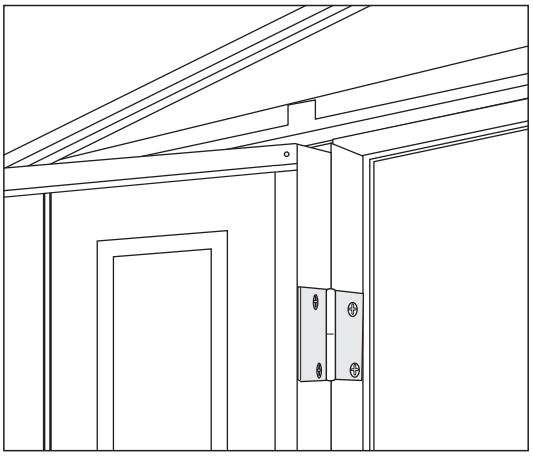

Note: To prevent water leakage it is important that these instructions are followed.

1. After completing the assembly apply silicone around the perimeter of the base U-channel. Seal the corners, joints and base of door column also.

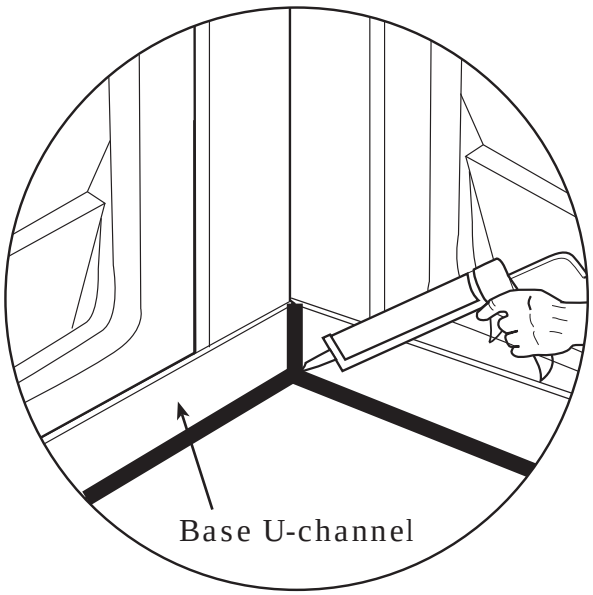

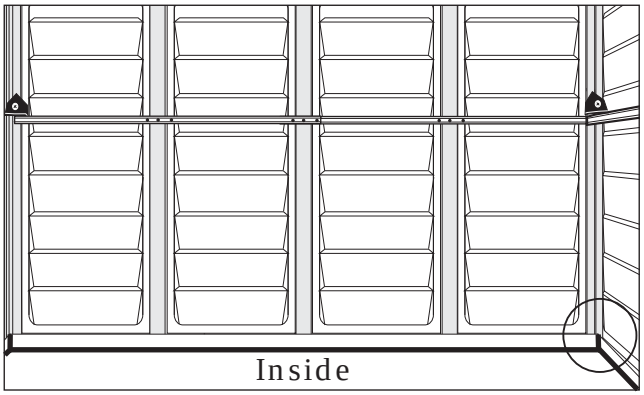

2. After completing the panel assembly, apply silicone around the roof plugs. This is optional and should be done for heavy rain areas if needed.

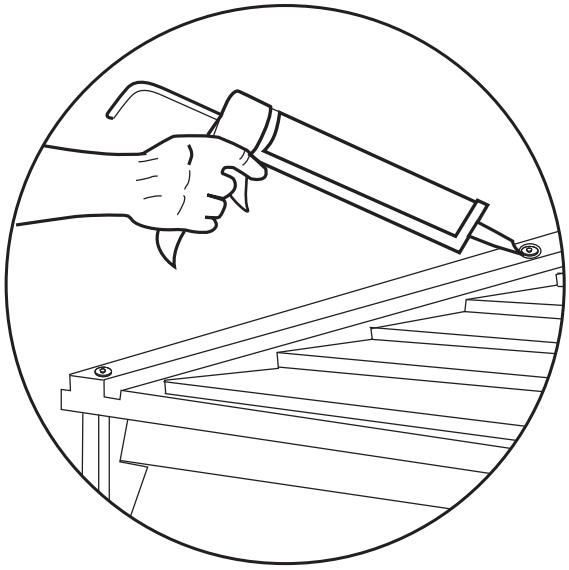

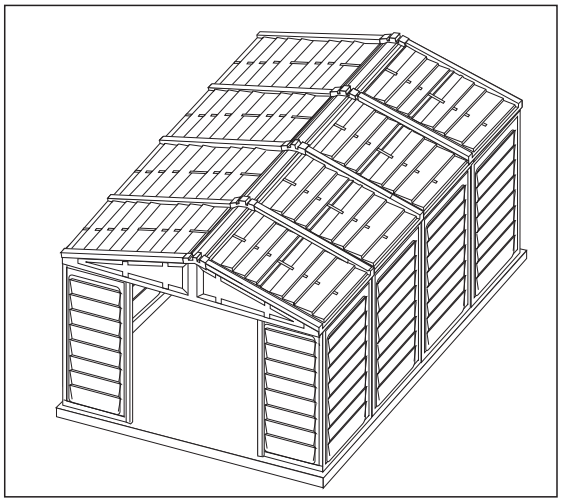

F. Optional Ventilation Kit

ACCESSORIES

CODE	DESCRIPTION	QTY
VC	VENTILATION COVER	2
VCP	VENTILATION COVER PIN	4

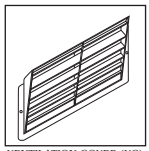
VENTILATION COVER (VC)

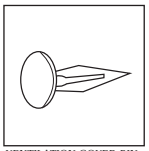
VENTILATION COVER PIN (VCP)

TOOLS YOU WILL NEED

Power Drill
Dia 5/32” (4.2mm) drill bit
Dia 1/2” (12.5mm) drill bit

Optional ventilation kits can be installed on any of the wall panels. However, we recomend mounting them on the top of the shed’s back wall.

1. Place the ventilation cover (VC) as shown in fig.1. Using a pencil, mark the two side hole locations.

2. On the marked hole locations, drill out two holes using dia. 5/32” (4.2mm) drill bit as shown in fig.2. These holes will be used to attach the ventilaion cover with the ventilation cover pins (VCP).

3. Use a dia. 1/2” (12.5mm) drill bit to drill out as many holes as desired behind the ventilation cover mounting area as in fig.3.

4. Attach the ventillation cover (VC) with the ventilation cover pin (VCP) as in fig.4.

5. Repeat the same to fix the second ventilation cover.

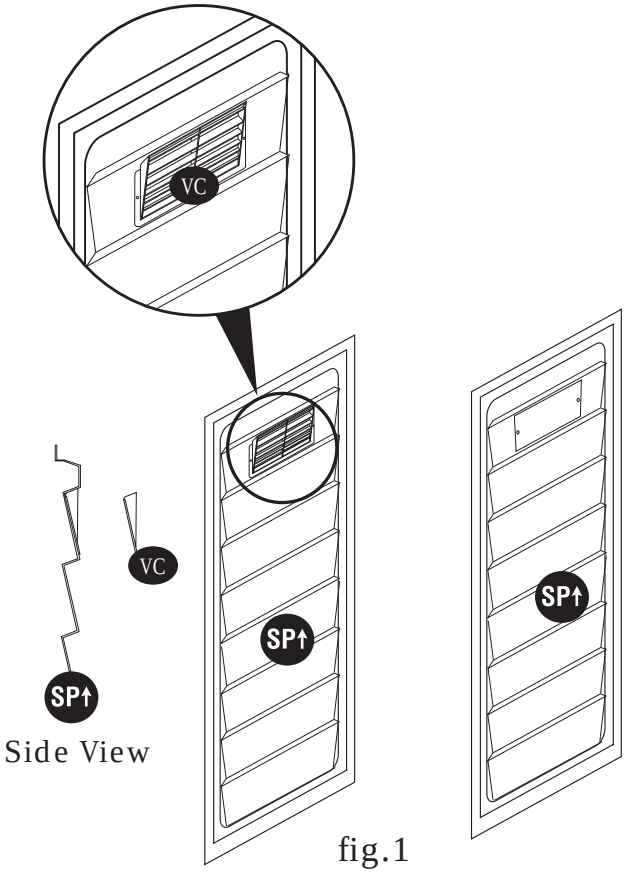

fig.1

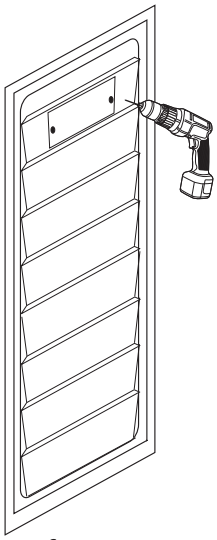
fig.2

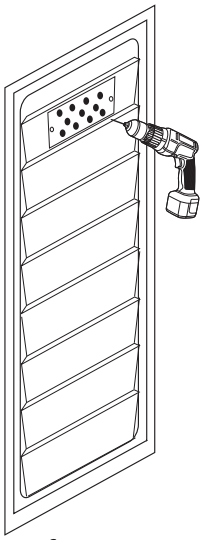
fig.3

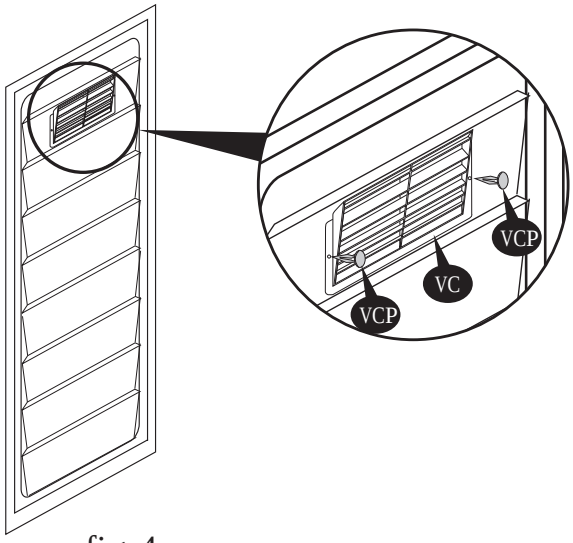

fig.4

High wind area installation instructions

Note: To ensure that your shed withstands high winds, you will need the following reinforcement.

Parts needed:

CODE	DESCRIPTION	QTY
S4	DIA. 4.2 x 16mm. (5/32” x 5/8”) SHEET METAL SCREW	48 (not included with shed)
S5	M6 x 40mm. (1/4” x 1 1/2”) Anchor bolt with nut	24 (not included with shed)

Parts needed for each extension:

CODE	DESCRIPTION	QTY
S4	DIA. 4.2 x 16mm. (5/32” x 5/8”) SHEET METAL SCREW	8 (not included with shed)
S5	M6 x 40mm. (1/4” x 1 1/2”) Anchor bolt with nut	6 (not included with shed)

1. Shed or shed foundation should be placed on concrete footing by use of anchor bolt and nut. Using a carpenters square, line up corners. Align U-Channel base, mark the concrete through the holes in the base and drill concrete with 1/2” (dia. 12.5mm) concrete bit to accept anchor bolts to a 1 3/4” (44mm) depth. Replace base and secure with 1/4” x 1 1/2” (M6 x 40mm) anchor bolts. See fig.

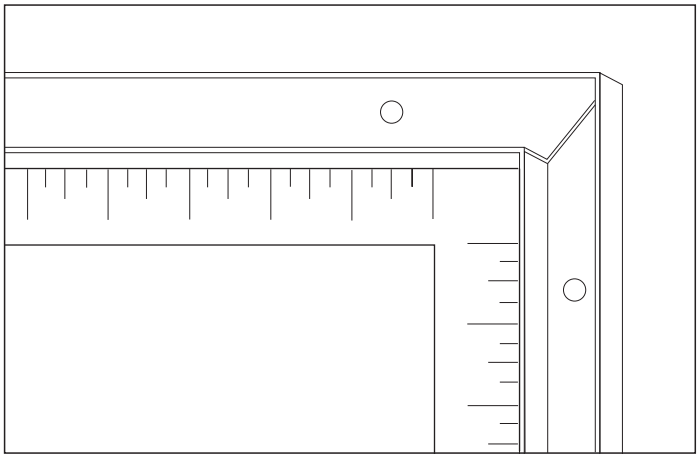

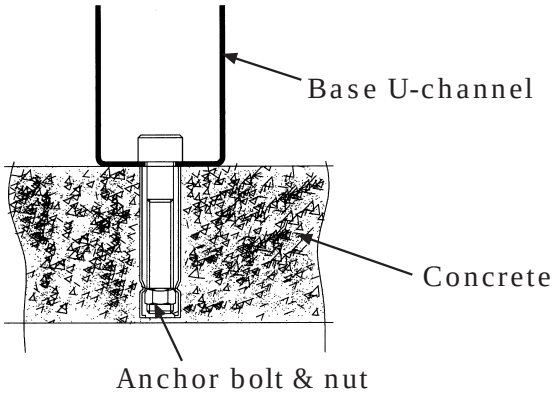

2. Attach each side panel (SP↑) at the bottom to the U-channel base. Using a dia. 3mm (1/8”) drill with a power drill, make two equal distance holes on the U-channel base through the side panel. Drive a self tapping screw (S4) through the base U-channel to the side panel. Repeat this for every side panel. See blowup.

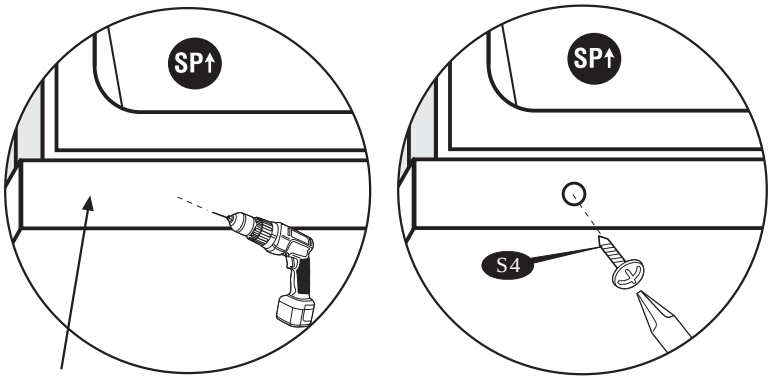

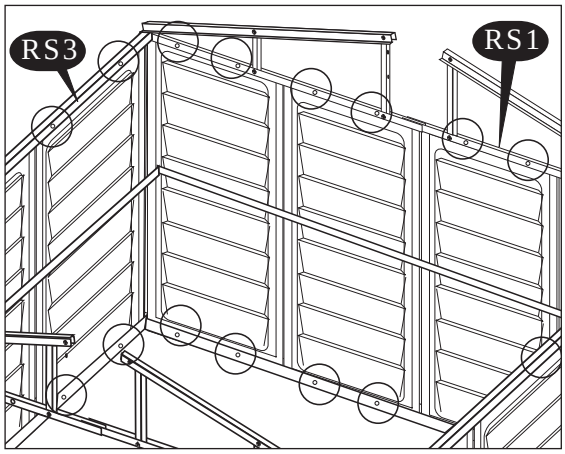

3. Attach each side panel (SP↑) on top to the roof structure (RS1) and (RS3). Using a dia. 3mm (1/8”) drill with a power drill, make two equal distance holes on the side panel through the roof structure. Drive a self tapping screw (S4) through the side panel to the roof structure. Repeat this for every side panel. See blowup.

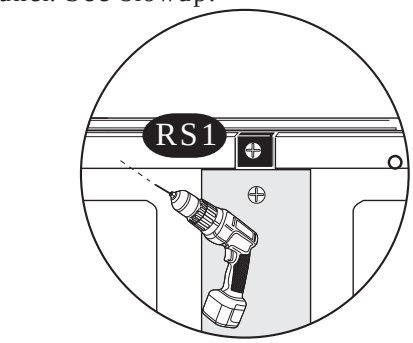

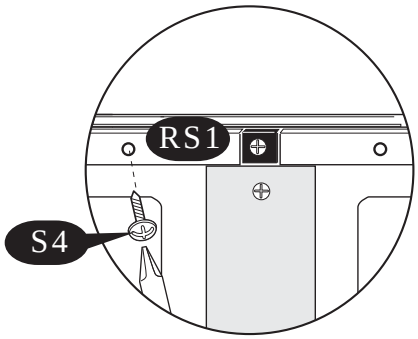

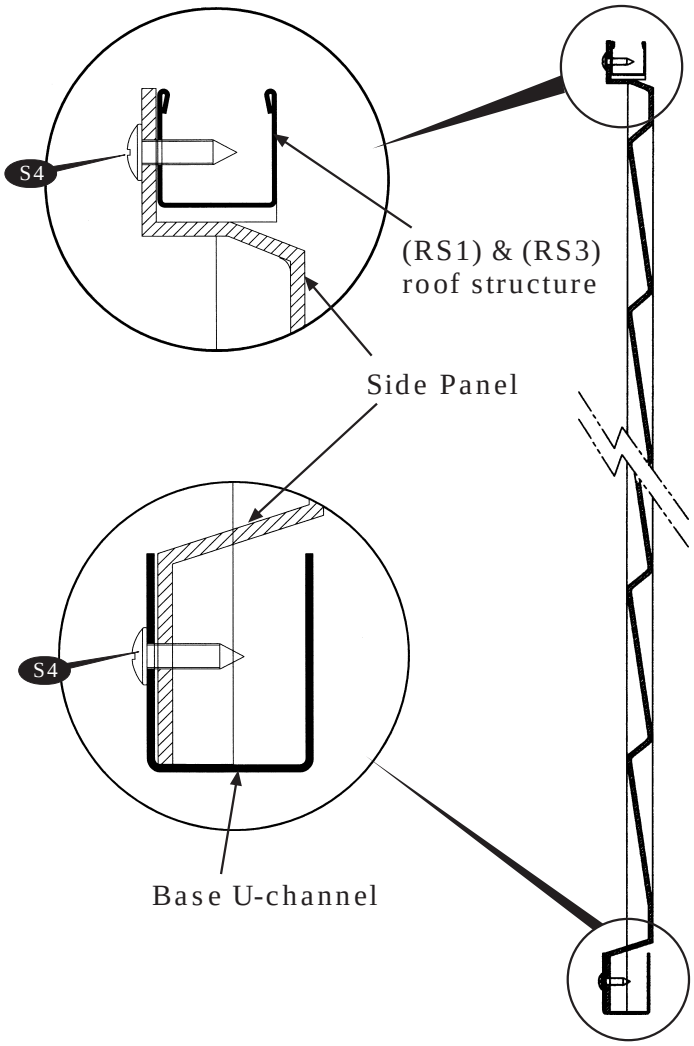

Important Warranty Information

The Duramax shed has been tested and passed wind loads of up to 115 mph in a controlled laboratory environment. Natural high wind areas create wind at unpredictable speeds that are very difficult to capture accurately by location. As such we cannot guarantee the performance of the shed in these extreme situations.

PART 2: Adding Extension Kit to Existing Shed

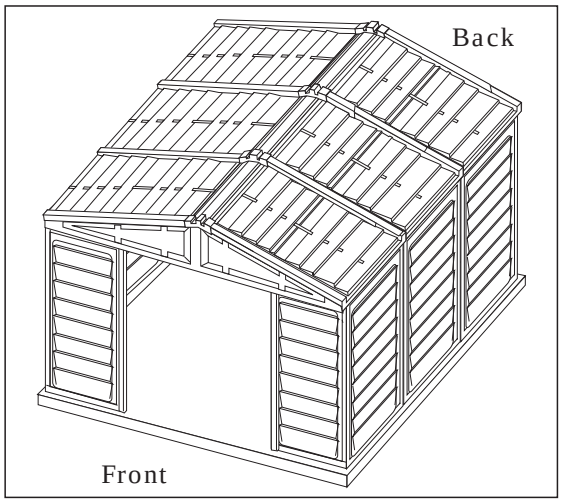

Note

Remove this Ridge cover.

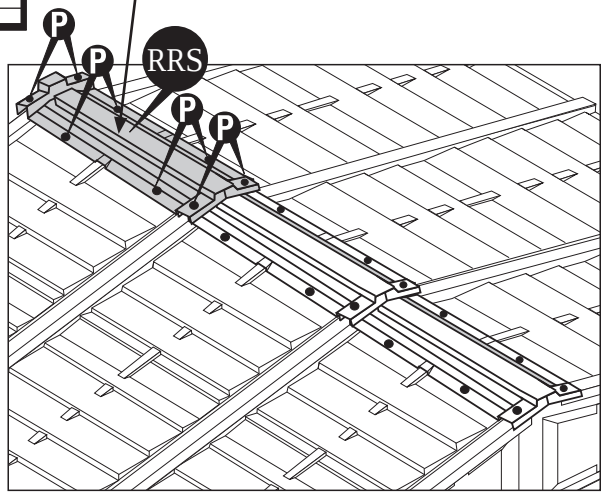

1. Remove one ridge cover (RRS) from the back side . See the figure.

TIP

Use a drilling machine to remove the pins and plugs from the ridge cover, roof panel and facia panel. Care should be taken not to damage the panels. Extra pins, plugs and washers are available in the accessory box.

2. Remove from back side left and right roof panels. See the figure.

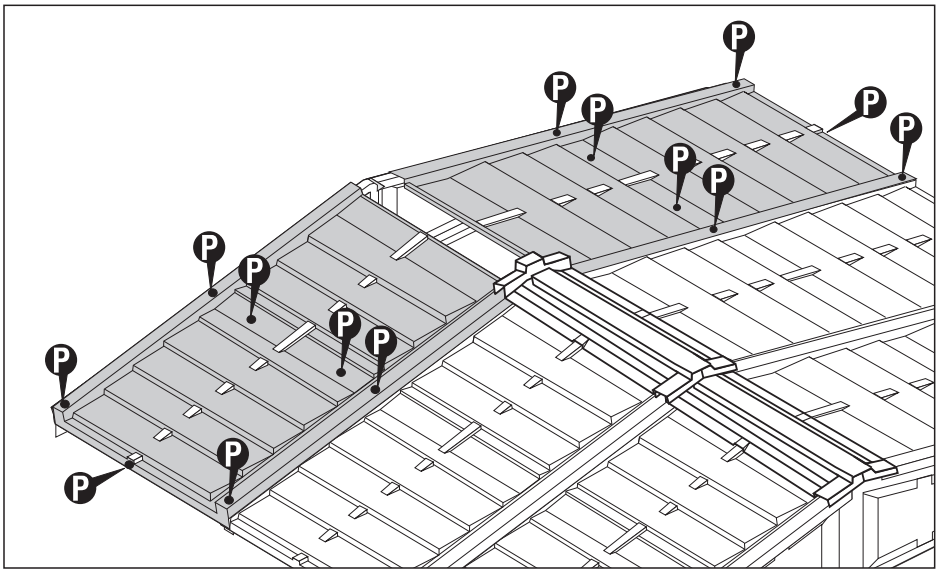

3. Remove the roof plugs (PPG) and pins (PIN) from backside facia panel and detach it from the shed.

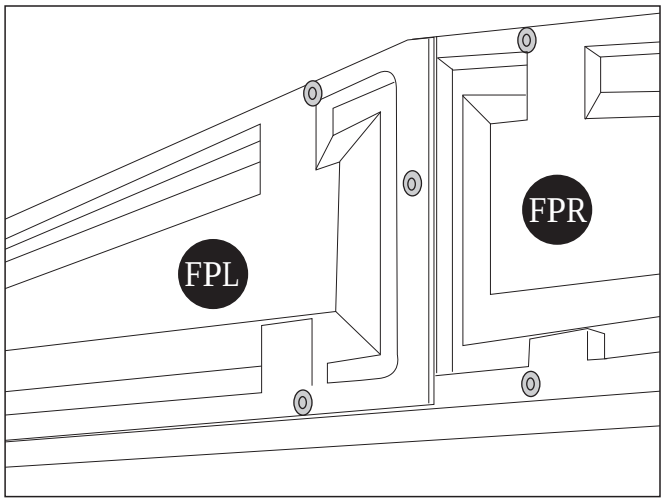

4. Support the roof structure (RS6XA) & (RS7XA) by using an appropriate support to avoid the roof structure from collapsing.

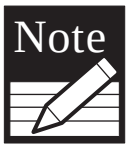

Support not included.

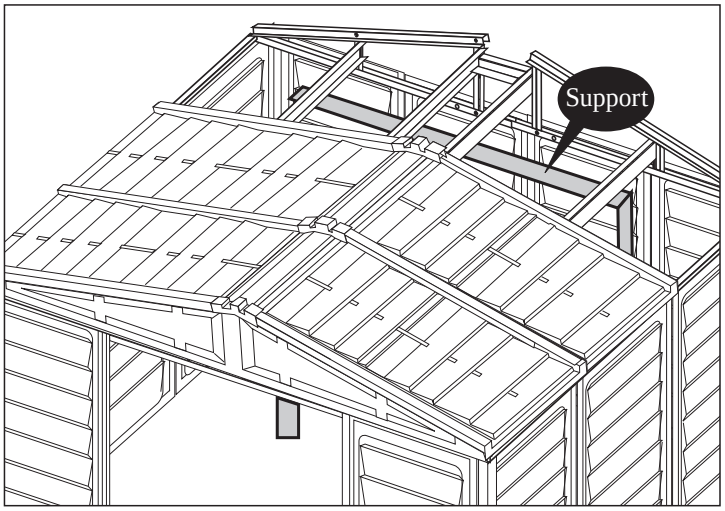

5. Remove (RS10A) from inside. See the figure.

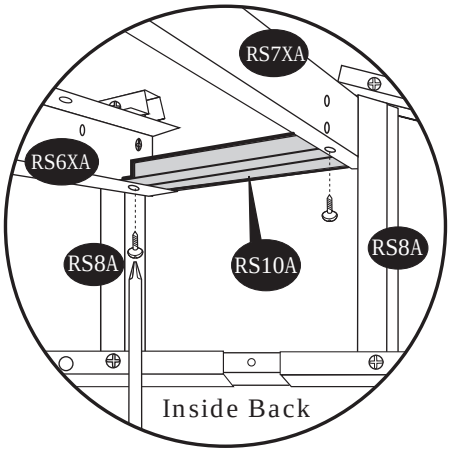

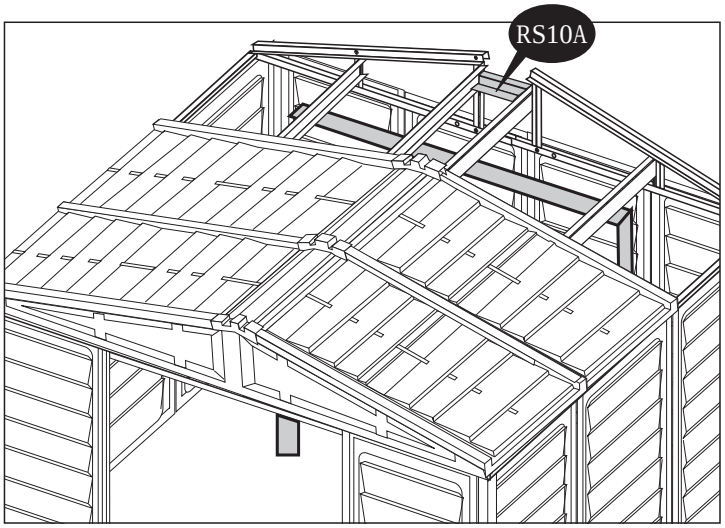

6. Detach (RS6XA) & (RS7XA) from (RS8A).

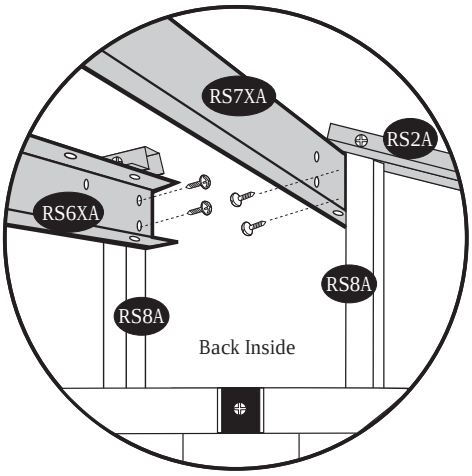

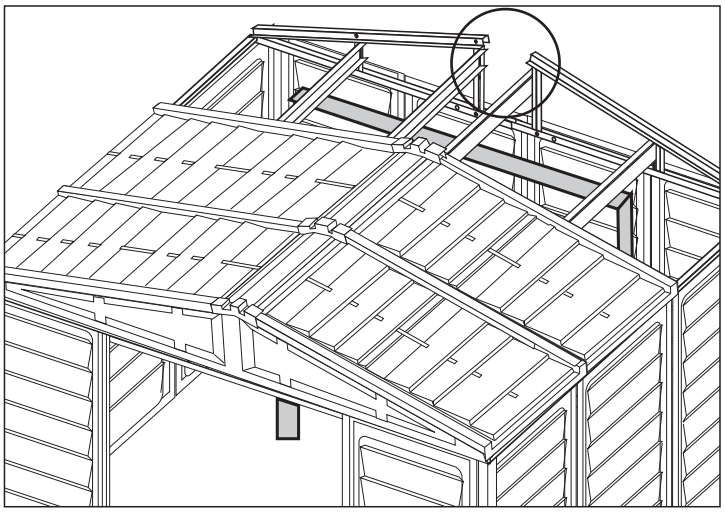

7. Detach (RS6XA) & (RS7XA) from (RS9A).
See fig.

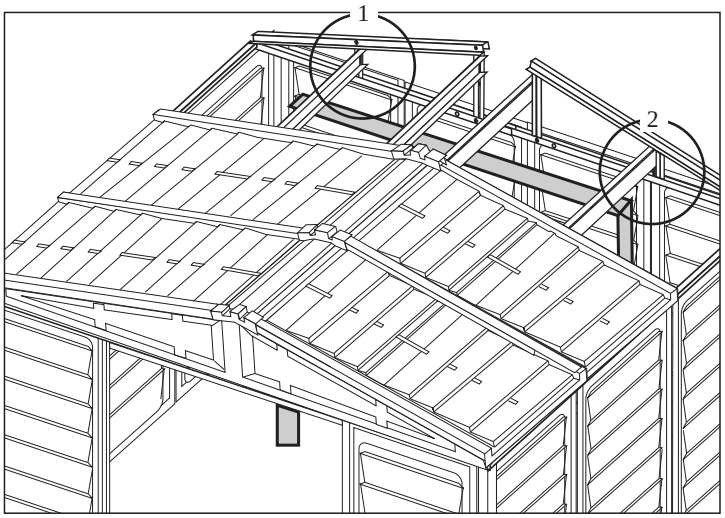

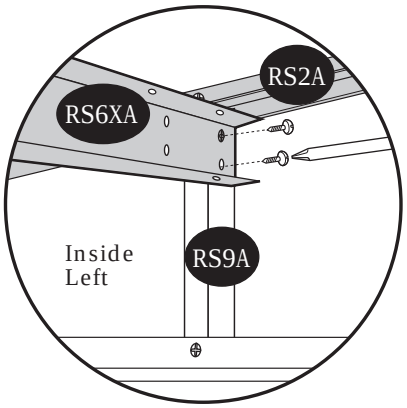

fig.1

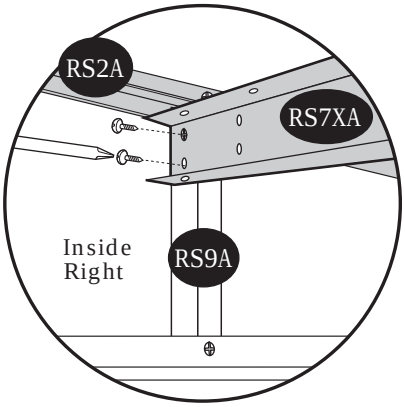

fig.2

8. Detach roof structure (RS2A) from roof structure (RS3XA) from both corners. See fig.1.
Detach 90-degree joint (RJ) from corner column fitting (FCC) from both corners. See fig.2.
Detach (RS3XA) from 90-degree joint (RJ) from both corners. See fig.3.

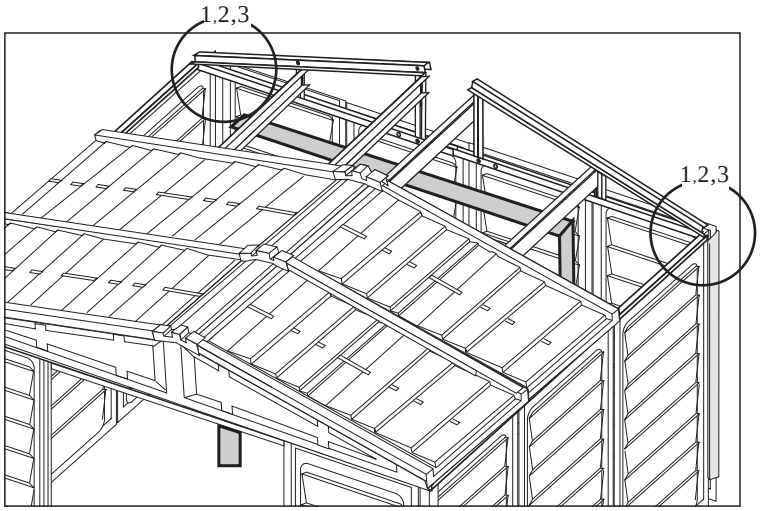

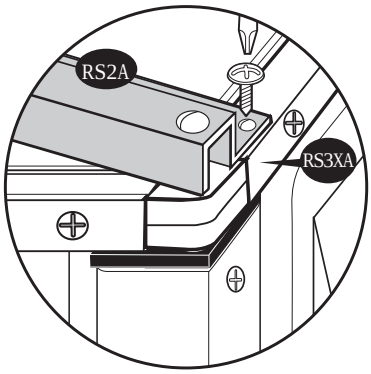

fig.1

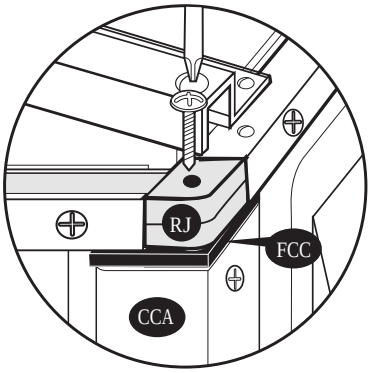

fig.2

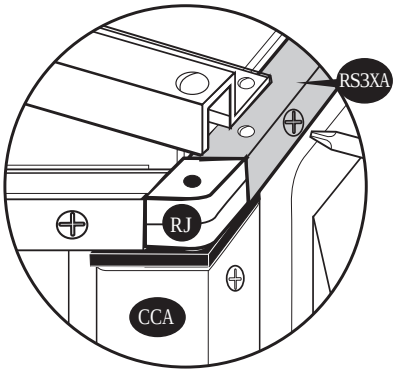

fig.3

9. Detach the middle column fittings (FMC) from roof structure (RS1A). See fig.

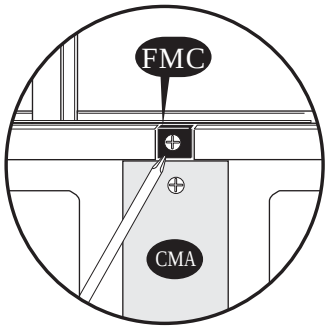

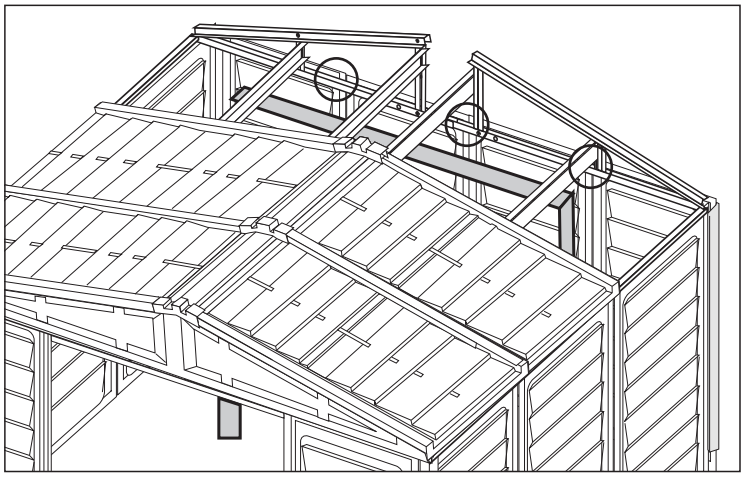

10. Pull the back roof assembly. See figure.

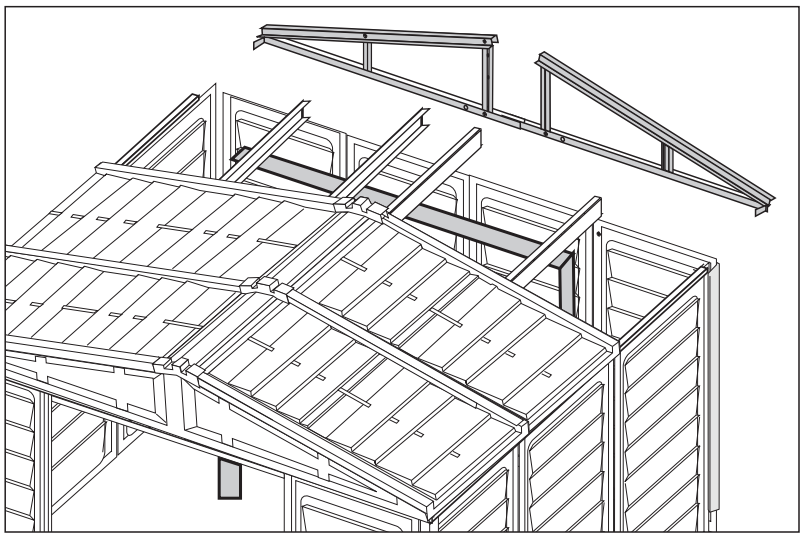

11. Detach the center bands (CB3XA) assembly from the back wall of the shed. Follow the figures.

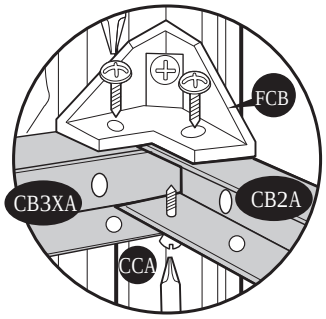

Fig.1: Detach (CB3XA) from (CB2A). Then detach (CB3XA) & (CB2A) from (FCB).

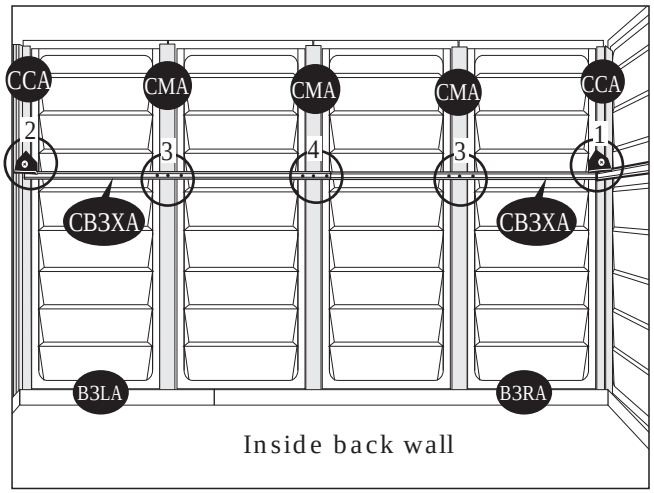

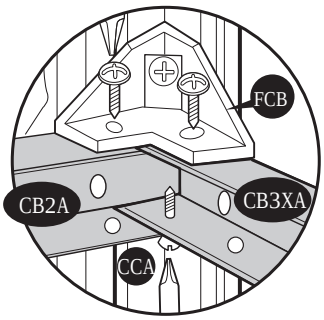

Fig.2: Detach (CB3XA) from (CB2A). Then detach (CB3XA) & (CB2A) from (FCB).

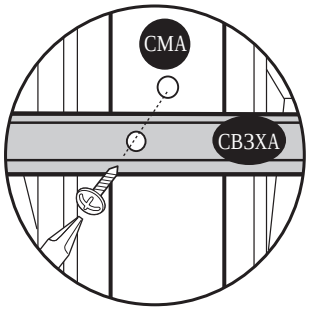

Fig.3: Detach (CB3XA) from (CMA).

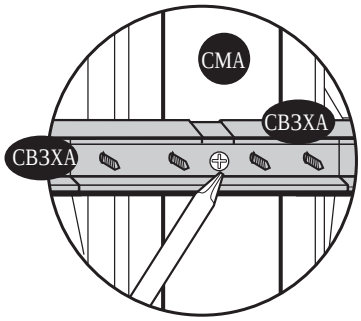

Fig.4: Detach (CB3XA) assembly from (CMA).

12. From outside back of the shed, detach the base angles from the corner column (CCA) at both corners and remove the corner columns. See fig.1.
From inside detach the (B3LA) & (B3RA) base angles from middle column (CMA). See fig.2.

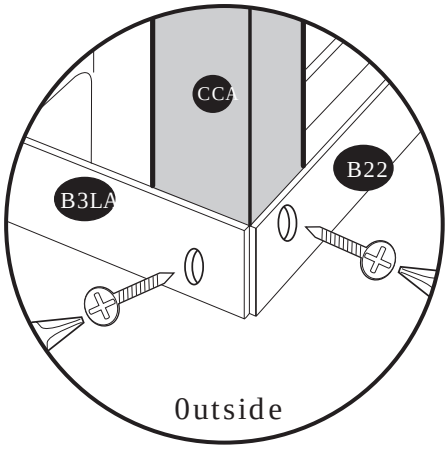

fig. 1

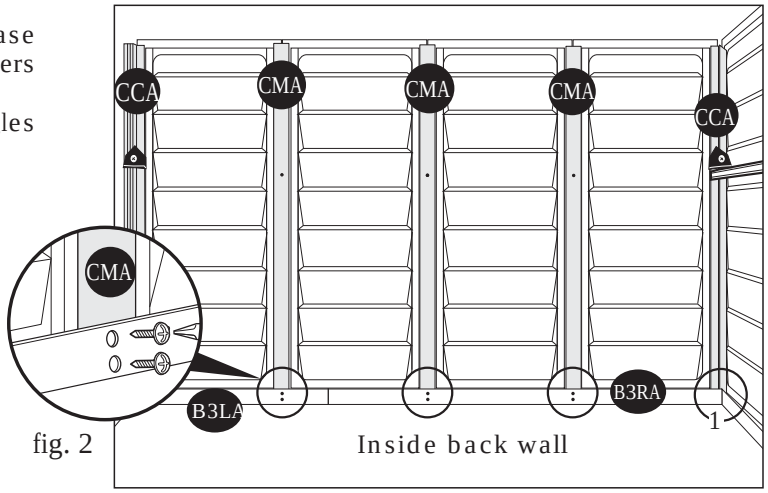

fig. 2

13. Detach the center bands (CB3XA) & (CB2A) assembly from the side wall of the shed on both side. Follow the figures.

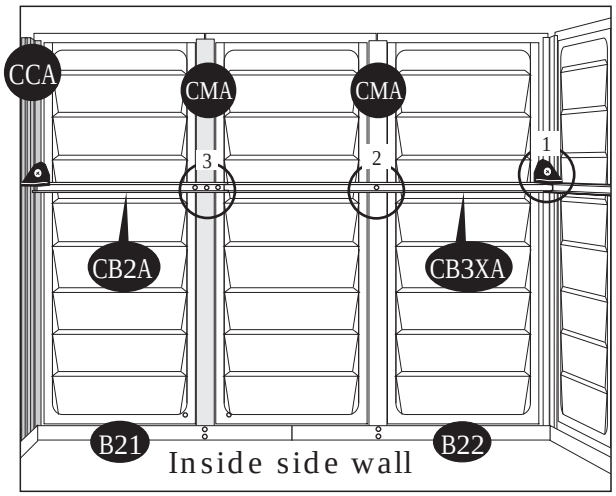

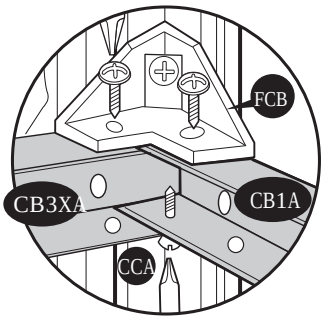

Fig.1: Detach (CB3XA) from (CB1A). Then detach (CB3XA) & (CB1A) from (FCB).

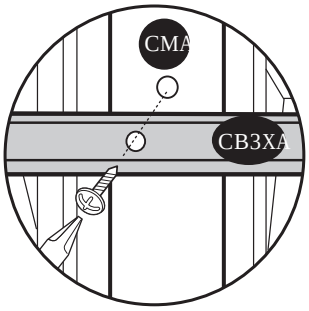

Fig.2: Detach (CB3XA) from (CMA).

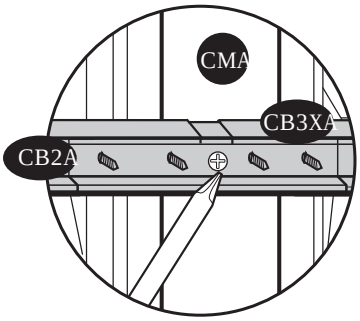

Fig.3: Detach (CB3XA) assembly from (CMA).

14. Detach the center bands (CB2A) & (CB3XA) from middle joining support (MJ). See fig.

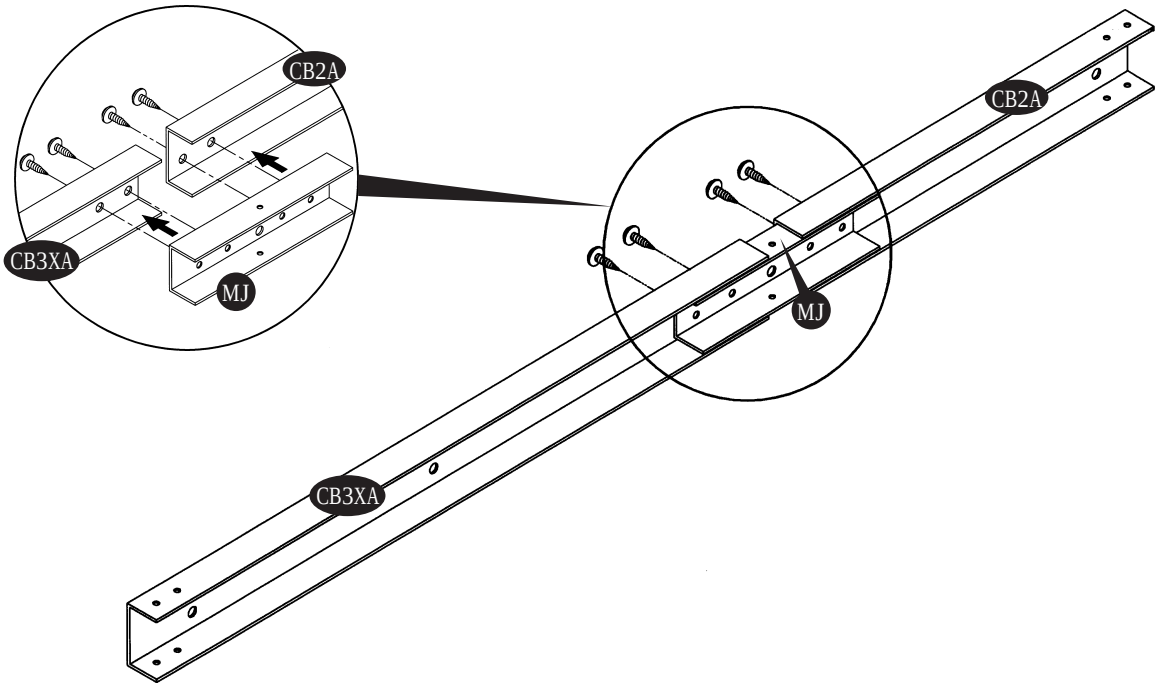

15. Come back to 10' x 8' Extension Kit manual (PART 1) and follow the steps accordingly.